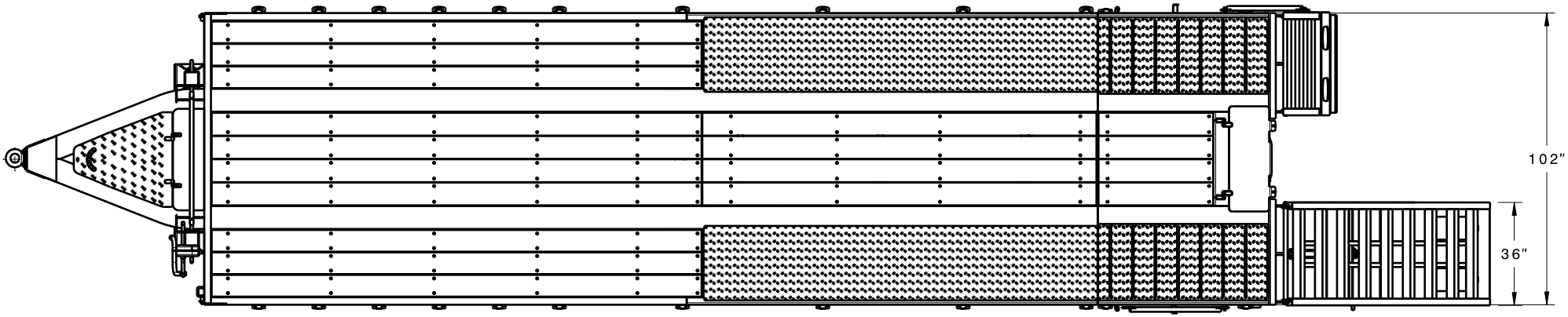

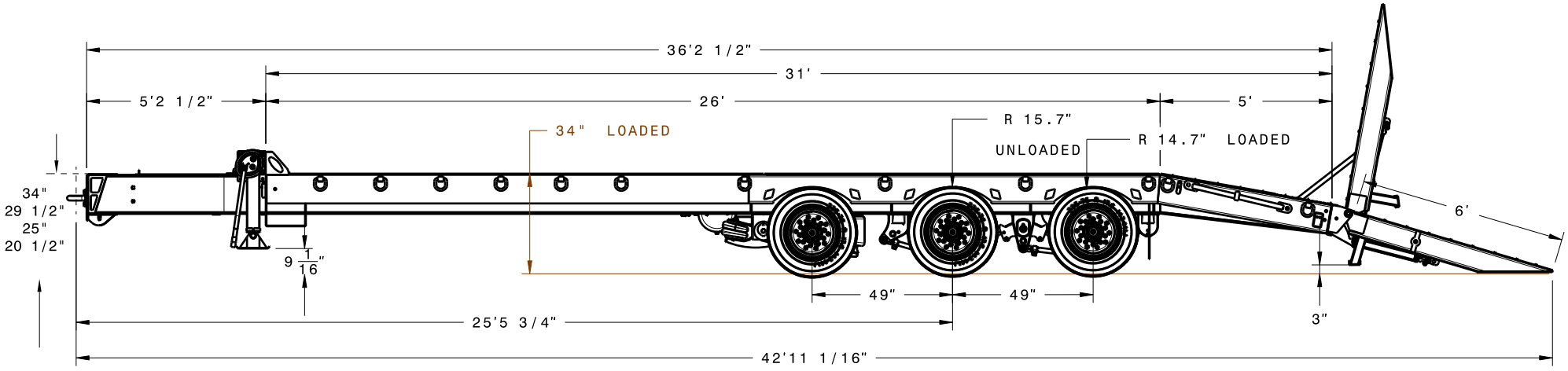

REV.	DESCRIPTION	BY	DATE
A.1	INITIAL RELEASE	CW	08/27/2019

DRAWN: CW | DATE: 08/27/2019
STRESS:
CHECKED:
APPROVED:

ALL DIMENSIONS ARE IN INCHES UNLESS OTHERWISE SPECIFIED
TOLERANCES UNLESS OTHERWISE SPECIFIED:
FRACTIONAL= +/-1/64
X.X=+/-0.1
X.XX=+/-0.01
X.XXX=+/-0.005
ANGLE=+/-0.5°

MATERIAL: | WEIGHT: 0 lb
FINISH:
CAGE CODE: | SCALE: 1/35 | SIZE: B

GLOBE TRAILERS

THIS DRAWING IS INTENDED FOR REVIEW AND OR AUTHORIZATION PURPOSES ONLY AND MAY NOT BE DISCLOSED, REPRODUSED OR USED WITHOUT THE EXPRESS PERMISSION OF GLOBE TRAILERS

TITLE: 210223- 30 TON (GTTU303-37-26)_H

PARENTS:	DWG NO.	REV.	SHEET
210223	00799405	A.1	1/4