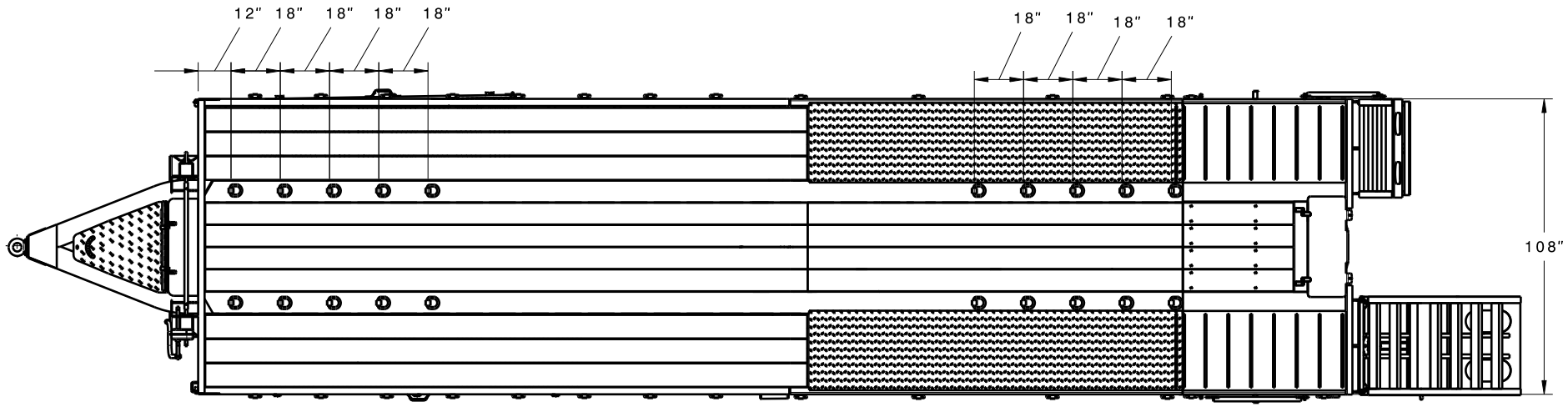

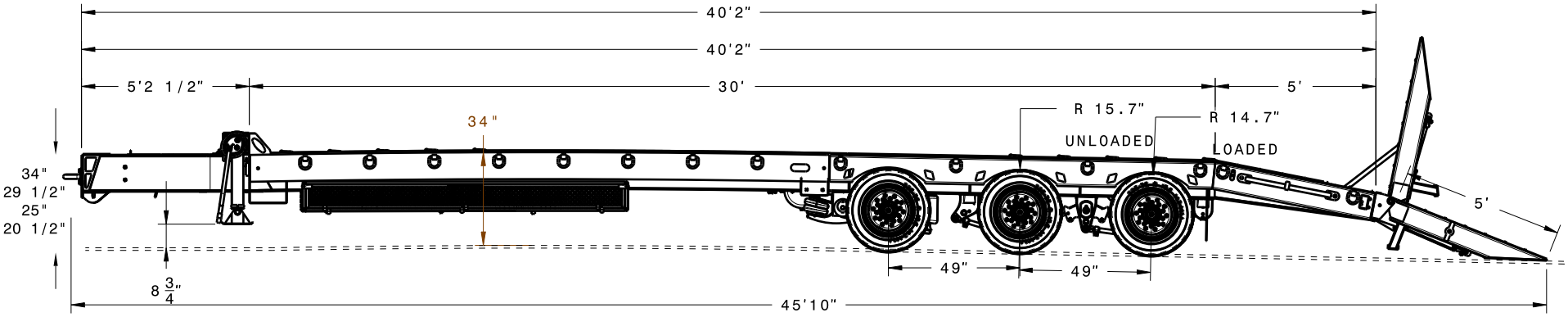

REV.	DESCRIPTION	BY	DATE
A.1	INITIAL RELEASE	CW	05/12/2020

DRAWN: CW
DATE: 05/12/2020
STRESS:
CHECKED:
APPROVED:

ALL DIMENSIONS ARE IN INCHES UNLESS OTHERWISE SPECIFIED
TOLERANCES UNLESS OTHERWISE SPECIFIED:
FRACTIONAL= +/-1/64
X.X=+/-0.1
X.XX=+/-0.01
X.XXX=+/-0.005
ANGLE=+/-0.5°

MATERIAL:
WEIGHT: 0 lb
FINISH:
CAGE CODE:
SCALE: 1/35
SIZE: B

GLOBE TRAILERS

THIS DRAWING IS INTENDED FOR REVIEW AND OR AUTHORIZATION PURPOSES ONLY AND MAY NOT BE DISCLOSED, REPRODUSED OR USED WITHOUT THE EXPRESS PERMISSION OF GLOBE TRAILERS

TITLE: 200909- 30 TON (GT TU303-35-24)_H

PARENTS: 200909
DWG NO. 00719726
REV. A.1
SHEET 1/4