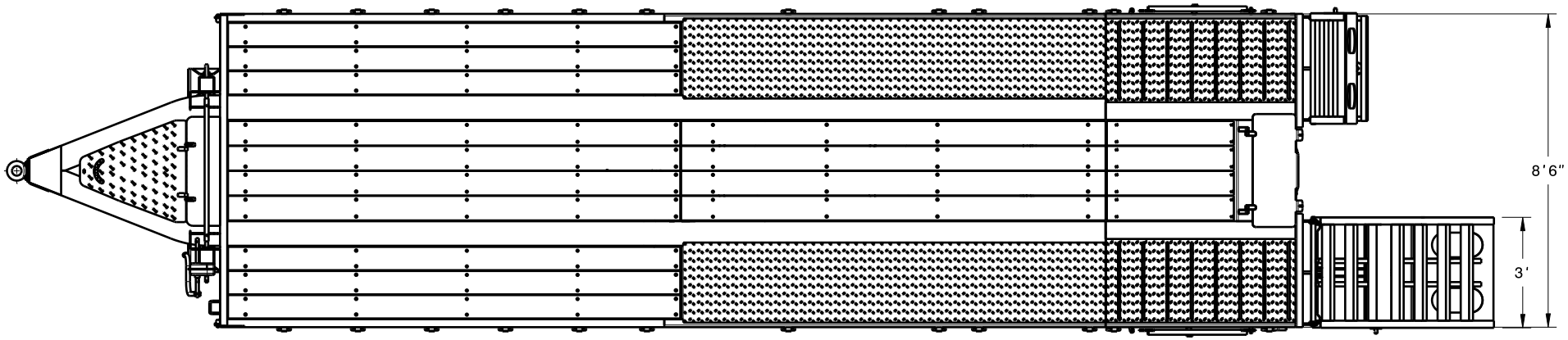

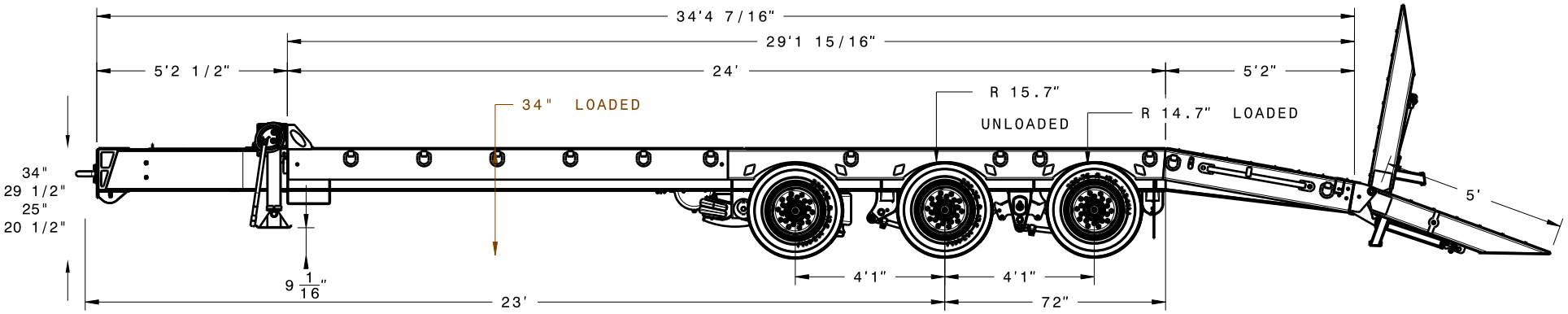

A.1	INITIAL RELEASE	SG	09/22/2018
REV.	DESCRIPTION	BY	DATE

DRAWN: SG	DATE: 09/22/2018
STRESS:	
CHECKED:	
APPROVED:	

ALL DIMENSIONS ARE IN INCHES UNLESS OTHERWISE SPECIFIED

TOLERANCES UNLESS OTHERWISE SPECIFIED:
FRACTIONAL= +/-1/64
X.X=+/-0.1
X.XX=+/-0.01
X.XXX=+/-0.005
ANGLE=+/-0.5°

MATERIAL:		WEIGHT: 0 lb	
FINISH:			
CAGE CODE:		SCALE: 1/35	SIZE: B

GLOBE TRAILERS

THIS DRAWING IS INTENDED FOR REVIEW AND OR AUTHORIZATION PURPOSES ONLY AND MAY NOT BE DISCLOSED, REPRODUSED OR USED WITHOUT THE EXPRESS PERMISSION OF GLOBE TRAILERS

TITLE: 180910- 30 TON (GTTU303-35-24)_H

PARENTS:	DWG NO.	REV.	SHEET
******	00465804	A.1	1/4