

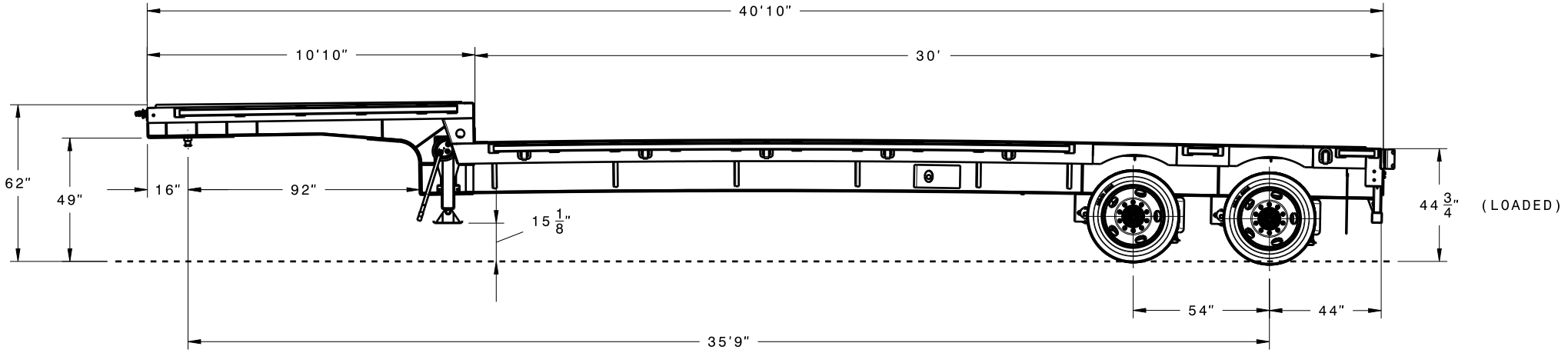

NOTE:
ALL DIMENSIONS ARE NOMINAL(+/- 3")

REV.	DESCRIPTION	BY	DATE
A.1	INITIAL RELEASE	SS	06-03-2020

DRAWN: SS	DATE: 06-03-2020	
STRESS: BW	04-10-2020	
CHECKED: VRB	06-03-2020	
APPROVED: JWALTERS	06-03-2020	

ALL DIMENSIONS ARE IN INCHES UNLESS OTHERWISE SPECIFIED

TOLERANCES UNLESS OTHERWISE SPECIFIED:
FRACTIONAL= +/-1/64
X.X=+/-0.1
X.XX=+/-0.01
X.XXX=+/-0.005
ANGLE=+/-0.5°

MATERIAL: | WEIGHT: 7005 lb
FINISH:
CAGE CODE: | SCALE: 1/40 | SIZE: B

GLOBE TRAILERS

THIS DRAWING IS INTENDED FOR REVIEW AND OR AUTHORIZATION PURPOSES ONLY AND MAY NOT BE DISCLOSED, REPRODUSED OR USED WITHOUT THE EXPRESS PERMISSION OF GLOBE TRAILERS

TITLE: 200228-40-TON FIXED NECK (GTFS402-41-30)_H

PARENTS:	DWG NO.	REV.	SHEET
200228	00677406	A.1	3/3