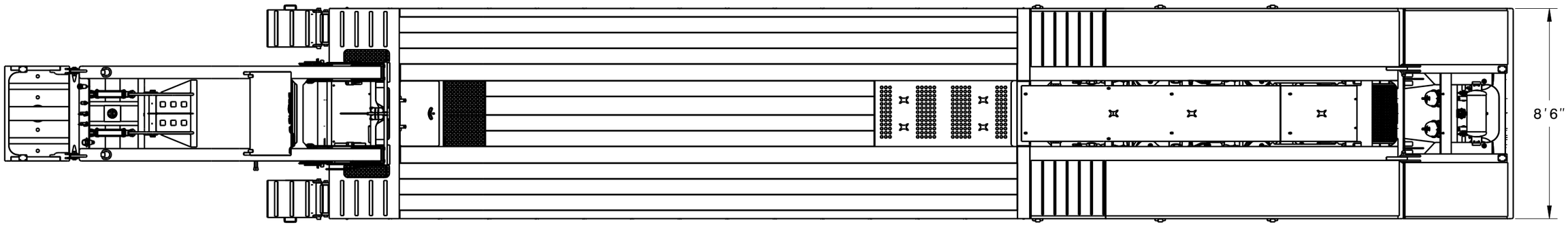

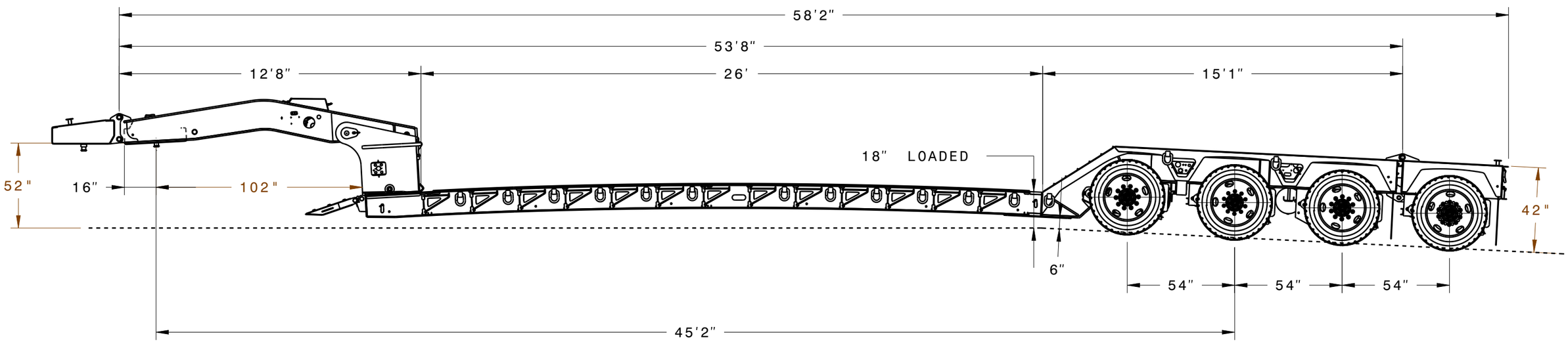

NOTE: ALL DIMENSIONS ARE NOMINAL(+/- 3")

REV.	DESCRIPTION	BY	DATE
A.1	INITIAL RELEASE	SM	04-11-2019

DRAWN: SM	DATE: 04-11-2019	MATERIAL:	WEIGHT: 19302.5 lb
STRESS: BW	03-04-2019	FINISH:	
CHECKED: SN	04-11-2019		
APPROVED: JW	04-11-2019	CAGE CODE:	SCALE: 1/50 SIZE: B

ALL DIMENSIONS ARE IN INCHES UNLESS OTHERWISE SPECIFIED

TOLERANCES UNLESS OTHERWISE SPECIFIED:
FRACTIONAL= +/-1/64
X.X=+/-0.1
X.XX=+/-0.01
X.XXX=+/-0.005
ANGLE=+/-0.5°

GLOBE TRAILERS

THIS DRAWING IS INTENDED FOR REVIEW AND OR AUTHORIZATION PURPOSES ONLY AND MAY NOT BE DISCLOSED, REPRODUSED OR USED WITHOUT THE EXPRESS PERMISSION OF GLOBE TRAILERS

TITLE: 181214-55-Ton HGG(GTBN553-54-26-HGG)_H

PARENTS:	DWG NO.	REV.	SHEET
181214	00538970	A.1	4/4