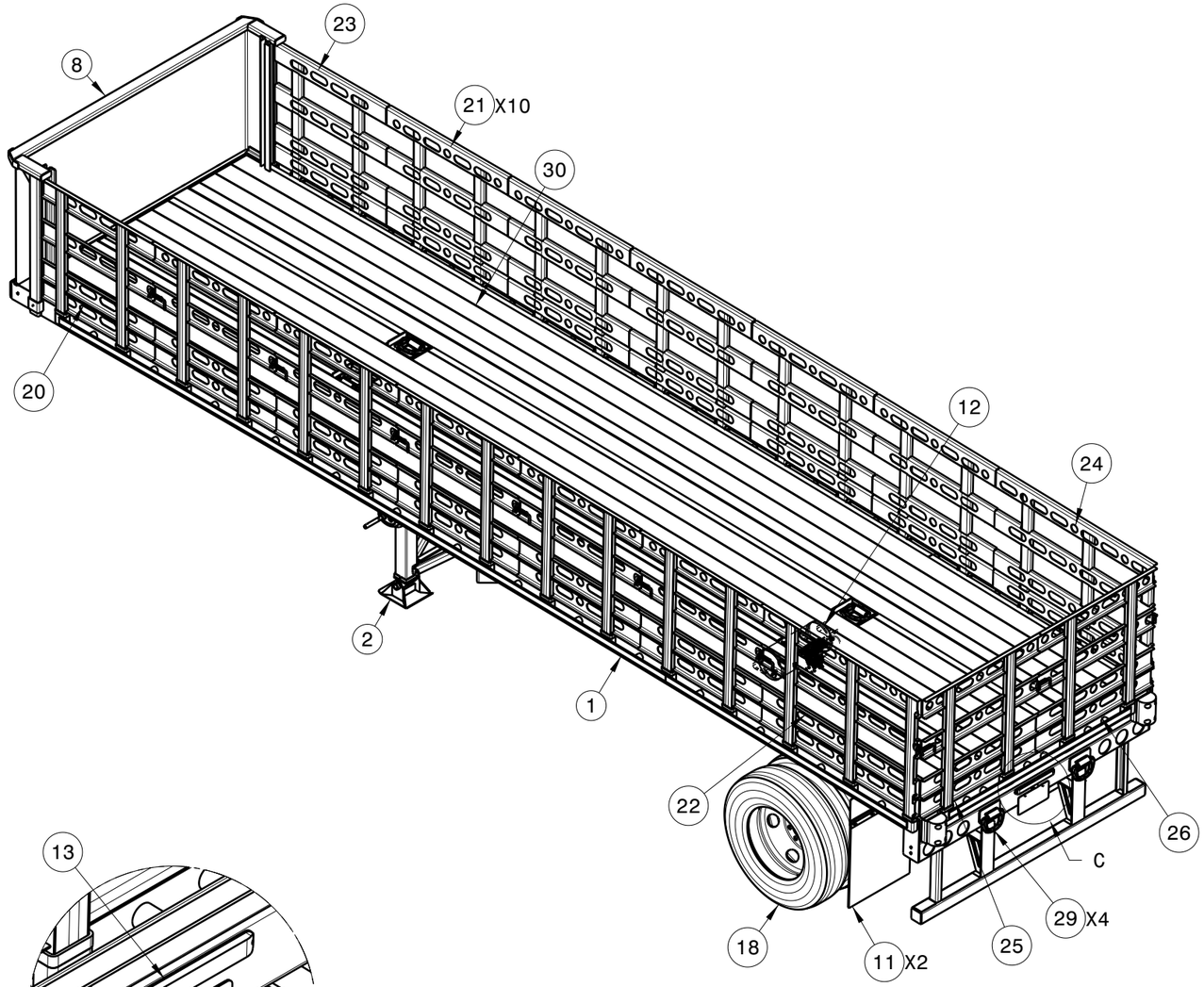

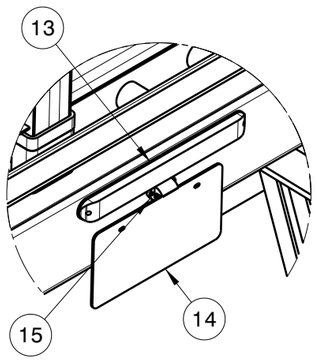

DETAIL C
SCALE: 1/10

ITEM	PART NO	QTY	DESC	ET.EA	WT.WA
1	00471187	1	FLATBED TRAILER STRUCTURE ASSEMBLY_H	5333.67	**
2	00471602	1	BM2263 4-5INCH LANDING LEG ASSEMBLY_B	**	**
3	00391569	1	LANDING LEG CROSS TUBE_0	5.29	10.58
4	00037884	2	LANDING LEG MOUNTING BRACKET 2	1.75	3.5
5	00082022	1	121994_HORIZONTAL BRACE	16.76	**
6	00471603	2	VERTICAL BRACE SHORT_14	9.8	19.6
7	00473390	2	INCLINED BRACE_14	8.78	17.56
8	00471649	1	96IN WIDTH 42IN HEIGHT BULKHEAD ASSEMBLY_H	609.71	**
9	00037878	1	FRONT WIRING PLATE_1	5.3	**
10	00081954	2	BOLT-ON MUDFLAP BRACKET_16	1.32	2.64
11	00143914	2	RUBBER MUD FLAP_B	**	**
12	00068813	1	9.5 INCH AIR TANK WITH 2S_1M ABS_0	**	**
13	00085644	1	SLIMLINE IDENTIFICATION LIGHT BAR_B(33-403)	**	**
14	00085643	1	LICENSE PLATE_B	**	**
15	00085645	1	LICENSE PLATE LIGHT_B(33-382)	**	**
16	00004117	1	7 WAY SOCKET_B(33-362)	**	**
17	00472161	2	H9700 SA OS UN MT 5RD .88 UB 1.75 SS WITH 365-00_B	**	**
18	00475187	1	11R22.5-H-71.5in AXLE TRACK ALL STEEL_0	**	**
19	00272347	2	EMERGENCY GLADHAND RED_B(25-253)	**	**
20	00533837	1	SIDE RACK ASSEMBLY LH 1_H	65.27	**
21	00533839	10	SIDE RACK ASSEMBLY LH 2_H	69.39	693.9
22	00533840	1	SIDE RACK ASSEMBLY LH 3_H	91.12	**
23	00533835	1	SIDE RACK ASSEMBLY RH 1_H	65.41	**
24	00533841	1	SIDE RACK ASSEMBLY RH 3_H	90.93	**
25	00533845	1	REAR SIDE RACK ASSEMBLY 1_H	66.29	**
26	00533844	1	REAR SIDE RACK ASSEMBLY 2_H	63.62	**
27	00482326	15	180967_0745-612390_B	**	**
28	00062968	15	LOCKING BRACKET 0745-612391_B	**	**
29	00034173	4	F643 120K D-ring_B	**	**
30	00525097	1	WOOD ASSEMBLY_B	**	**

DESIGN CRITERIA	
TIRE SIZE	: 11R X 22.5 "H"
WHEEL SIZE	: 8.25 X 22.5 HUB PILOTED STEEL
AXLE TRACK	: 71-1/2"
SUSPENSION	: SPRING RIDE SINGLE AXLE OVERSLUNG WITH 365-00 SPRINGS

REV.	DESCRIPTION	BY	DATE
A.1	INITIAL RELEASE	SM	03-13-2019

DRAWN: SM | DATE: 03-13-2019
STRESS: | CHECKED: | APPROVED:

ALL DIMENSIONS ARE IN INCHES UNLESS OTHERWISE SPECIFIED
TOLERANCES UNLESS OTHERWISE SPECIFIED:
FRACTIONAL= +/-1/64
X.X=+/-0.1
X.XX=+/-0.01
X.XXX=+/-0.005
ANGLE=+/-0.5°

MATERIAL: | WEIGHT: 7199 lb
FINISH:
CAGE CODE: | SCALE: 1/40 | SIZE: B

GLOBE TRAILERS

THIS DRAWING IS INTENDED FOR REVIEW AND OR AUTHORIZATION PURPOSES ONLY AND MAY NOT BE DISCLOSED, REPRODUSED OR USED WITHOUT THE EXPRESS PERMISSION OF GLOBE TRAILERS

TITLE: 181022-(GTFF121-30) FLATBED TRAILER GENERAL ASSEMBLY_H

PARENTS: 181022 | DWG NO. 00533711 | REV. A.1 | SHEET 1/4

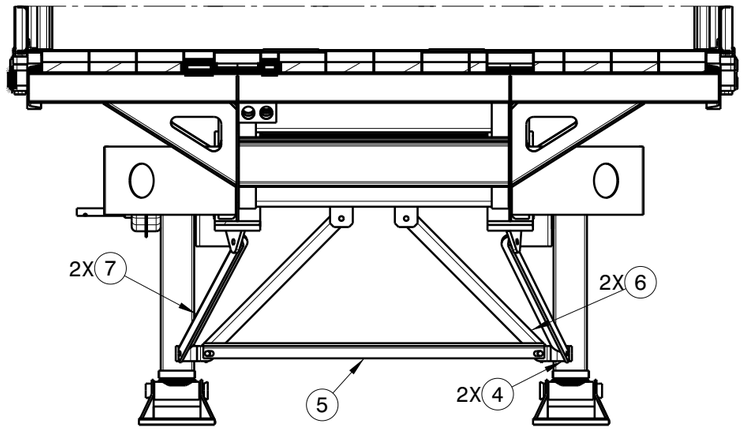

SECTION E-E
SCALE: 1/20

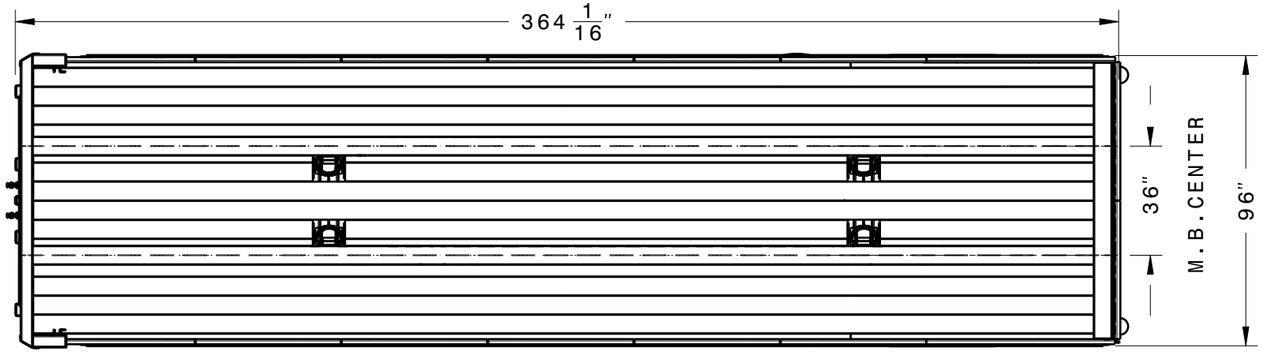

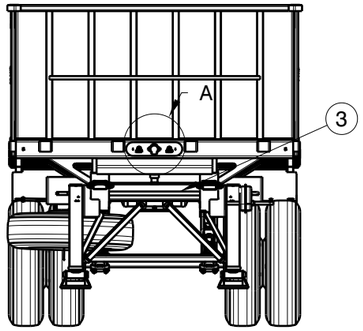

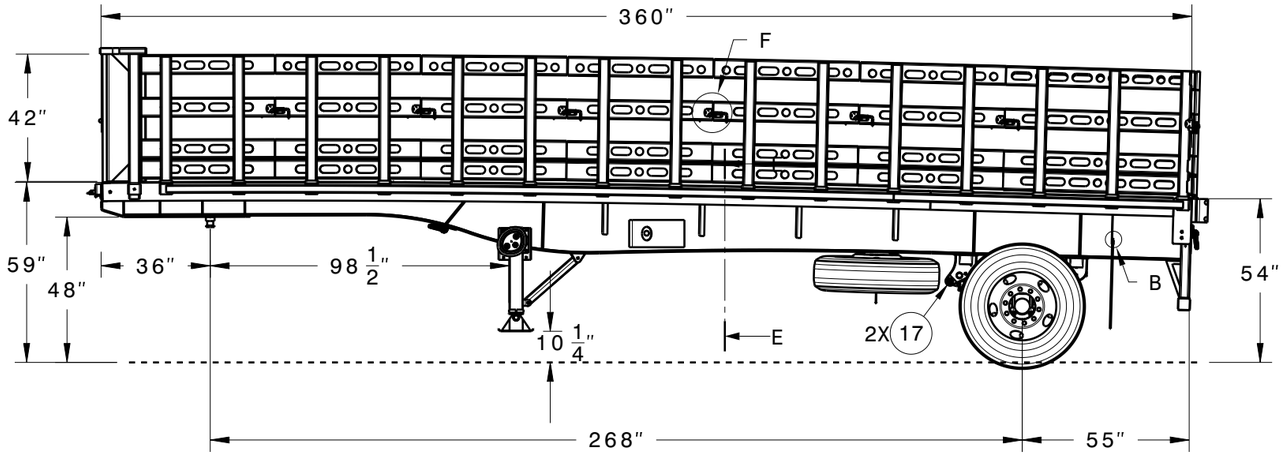

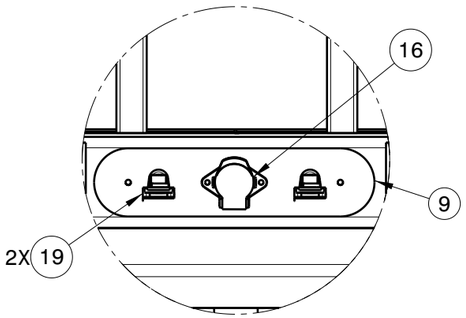

DETAIL A
SCALE: 1/10

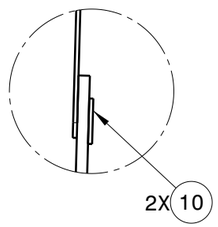

DETAIL B
SCALE: 1/5

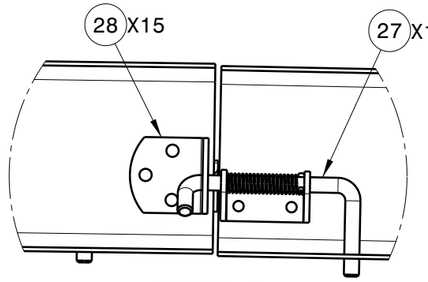

DETAIL F
SCALE: 1/5

REV.	DESCRIPTION	BY	DATE
A.1	INITIAL RELEASE	SM	03-13-2019

DRAWN: SM | DATE: 03-13-2019
STRESS:
CHECKED:
APPROVED:

ALL DIMENSIONS ARE IN INCHES UNLESS OTHERWISE SPECIFIED

TOLERANCES UNLESS OTHERWISE SPECIFIED:
FRACTIONAL= +/-1/64
X.X=+/-0.1
X.XX=+/-0.01
X.XXX=+/-0.005
ANGLE=+/-0.5°

MATERIAL: | WEIGHT: 7199 lb
FINISH:
CAGE CODE: | SCALE: 1/50 | SIZE: B

GLOBE TRAILERS

THIS DRAWING IS INTENDED FOR REVIEW AND OR AUTHORIZATION PURPOSES ONLY AND MAY NOT BE DISCLOSED, REPRODUSED OR USED WITHOUT THE EXPRESS PERMISSION OF GLOBE TRAILERS

TITLE: 181022-(GTFF121-30) FLATBED TRAILER GENERAL ASSEMBLY_H

PARENTS:	DWG NO.	REV.	SHEET
181022	00533711	A.1	2/4

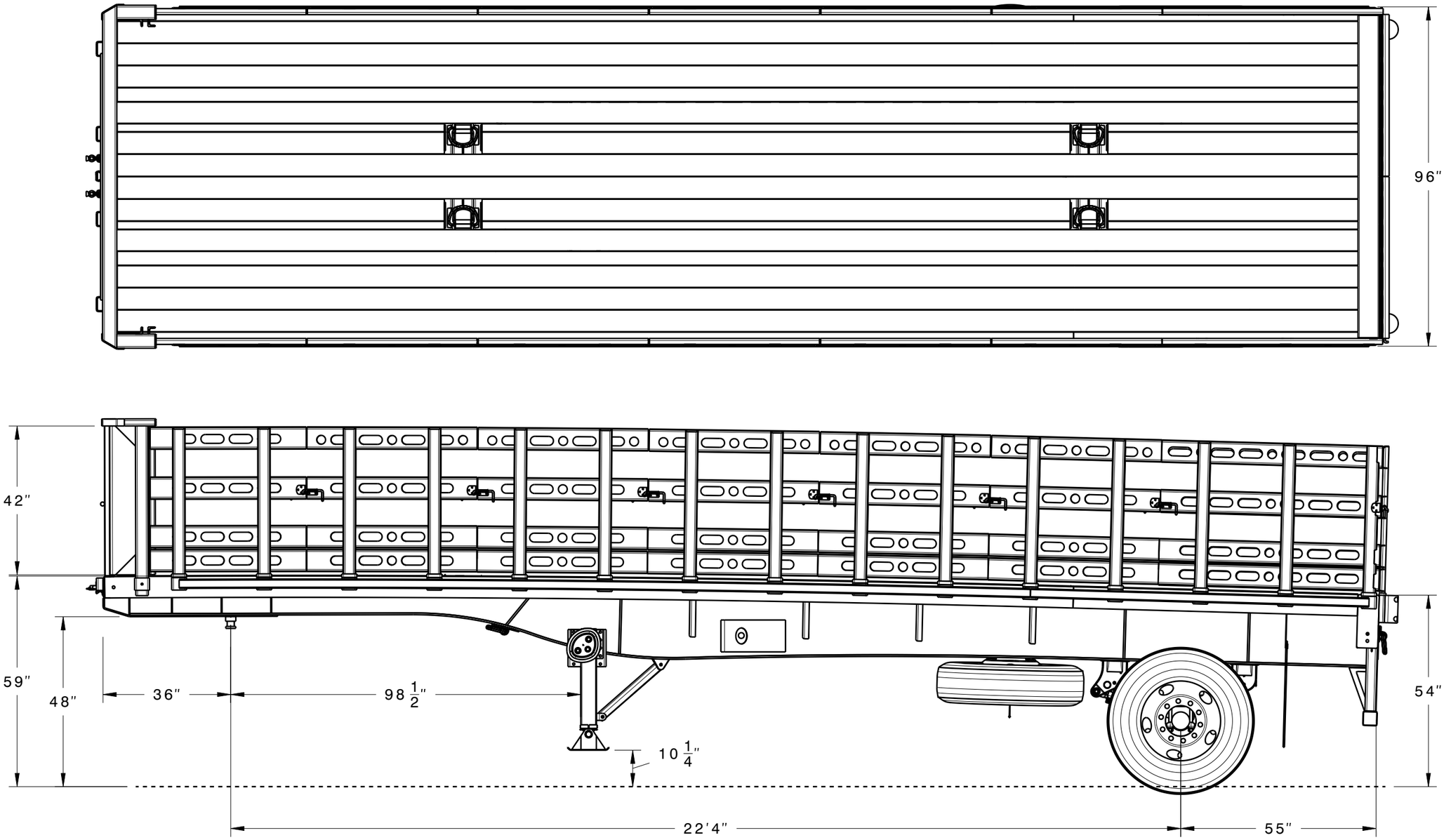

NOTE:
ALL DIMENSIONS ARE NOMINAL(+/- 3")

REV.	DESCRIPTION	BY	DATE
A.1	INITIAL RELEASE	SM	03-13-2019

DRAWN: SM | DATE: 03-13-2019
STRESS: | CHECKED: | APPROVED:

ALL DIMENSIONS ARE IN INCHES UNLESS OTHERWISE SPECIFIED
TOLERANCES UNLESS OTHERWISE SPECIFIED:
FRACTIONAL= +/-1/64
X.X=+/-0.1
X.XX=+/-0.01
X.XXX=+/-0.005
ANGLE=+/-0.5°

MATERIAL: | WEIGHT: 7199 lb
FINISH:
CAGE CODE: | SCALE: 1/30 | SIZE: B

GLOBE TRAILERS

THIS DRAWING IS INTENDED FOR REVIEW AND OR AUTHORIZATION PURPOSES ONLY AND MAY NOT BE DISCLOSED, REPRODUSED OR USED WITHOUT THE EXPRESS PERMISSION OF GLOBE TRAILERS

TITLE: 181022-(GTFF121-30) FLATBED TRAILER GENERAL ASSEMBLY_H

PARENTS:	DWG NO.	REV.	SHEET
181022	00533711	A.1	3/4