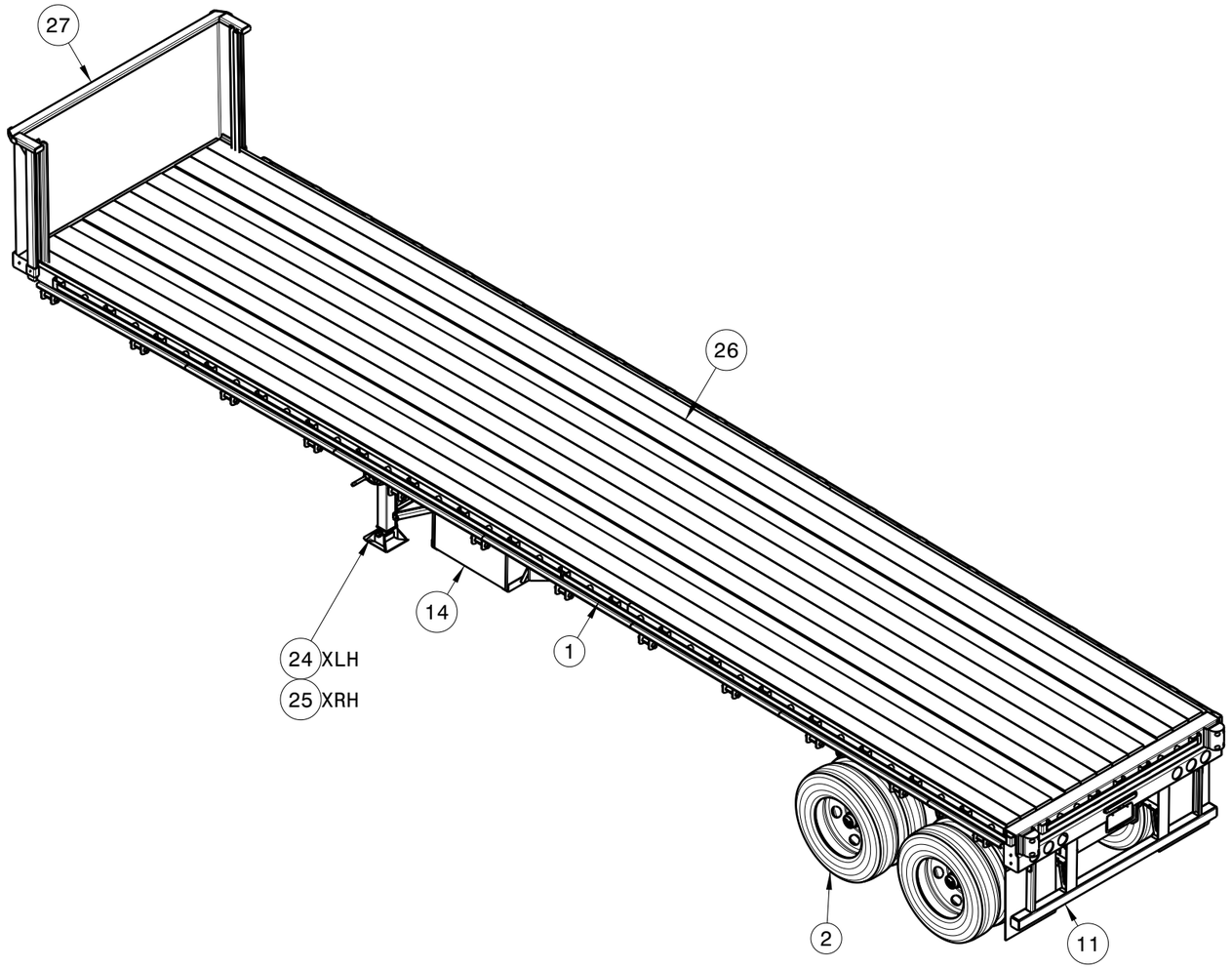

ISOMETRIC

ITEM	PART NO.	QTY	DESC	WT.EA	ET.EA
1	00530610	1	20T DOUBLE AXLE FLATBED TRAILER STRUCTURE ASSEMBLY_H	6928	**
2	00286359	2	11R22.5-H-77.5in AXLE TRACK ALL STEEL_0	**	**
3	00038449	1	LANDING LEG CROSS TUBE_25	14.6	**
4	00037883	2	LANDING LEG MOUNTING BRACKET 1_1	2.6	5.2
5	00037884	2	123806_LANDING LEG MOUNTING BRACKET 2	3.8	7.6
6	00335645	1	HORIZONTAL BRACE_14	43.1	**
7	00497815	2	VERTICAL BRACE SHORT_14	23.8	47.6
8	00497836	1	INCLINED BRACE LH_14	22.8	**
9	00497837	1	INCLINED BRACE RH_14	22.8	**
10	00336256	2	3/8" BLACK PLASTIC MUDFLAP 24" x 30"_B(36-369)	**	**
11	00335647	1	REMOVABLE REAR BUMPER ASSEMBLY_H	264.09	**
12	00068818	1	13 INCH AIR TANK WITH 2S 1M ABS AND SPRING BRAKE VALVE_0	**	**
13	00038443	1	REMOVABLE LICENSE PLATE_B	**	**
14	00038454	1	TOOLBOX 18 x 18 x 36_B(19-234)	**	**
15	00272347	1	EMERGENCY GLADHAND RED_B(25-253)	**	**
16	00085644	1	SLIMLINE IDENTIFICATION LIGHT BAR_B(33-403)	**	**
17	00085643	1	LICENSE PLATE_B	**	**
18	00085645	1	LICENSE PLATE LIGHT_B(33-382)	**	**
19	00004117	1	7 WAY SOCKET_B(33-362)	**	**
20	00004123	1	SERVICE GLADHAND BLUE_B(25-256)	**	**
21	00288083	1	FRONT WIRING PLATE_1	4.9	**
22	00278931	2	PROTECT O SEAL_B(25-254)	**	**
23	00038455	1	265707 SLIDER H9001 FB TA H9700 7.5 HI 44SC 43.69 OAC_B(48-663)	**	**
24	00142059	1	5HOLE PATTERN LANDING GEAR LH_B(31-320)	**	**
25	00142060	1	5HOLE PATTERN LANDING GEAR RH_0	**	**
26	00497950	1	WOOD ASSEMBLY_P	**	**
27	00498438	1	102INCH WIDTH WELDED BULKHEAD ASSEMBLY_H	723.79	**
28	00081954	2	BOLT-ON MUDFLAP BRACKET_16	2.89	5.78

DESIGN CRITERIA
TIRE SIZE : 11R X 22.5 H
WHEEL SIZE : 8.25 X 22.5 ALL STEEL
SUSPENSION : 226575 WITH 365-01
AXLE TRACK : 77-1/2"

REV.	DESCRIPTION	BY	DATE
A.1	INITIAL RELEASE	CS	03-22-2019

DRAWN: CS 03-22-2019
STRESS: BW 03-05-2019
CHECKED: SN 03-22-2019
APPROVED: JWALTERS 03-26-2019

ALL DIMENSIONS ARE IN INCHES UNLESS OTHERWISE SPECIFIED

TOLERANCES UNLESS OTHERWISE SPECIFIED:
FRACTIONAL= +/-1/64
X.X=+/-0.1
X.XX=+/-0.01
X.XXX=+/-0.005
ANGLE=+/-0.5°

MATERIAL:
WEIGHT: 7832 lb
FINISH:
CAGE CODE:
SCALE: 1/50
SIZE: B

GLOBE TRAILERS

THIS DRAWING IS INTENDED FOR REVIEW AND OR AUTHORIZATION PURPOSES ONLY AND MAY NOT BE DISCLOSED, REPRODUSED OR USED WITHOUT THE EXPRESS PERMISSION OF GLOBE TRAILERS

TITLE: 180967-20-TON, DOUBLE AXLE, FLATBED TRAILER_H

PARENTS: 180967
DWG NO. 00530878
REV. A.1
SHEET 1/3

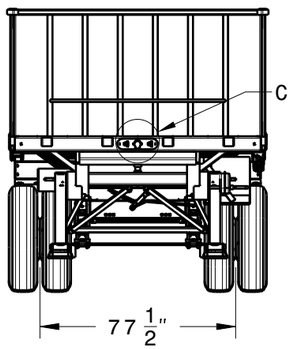

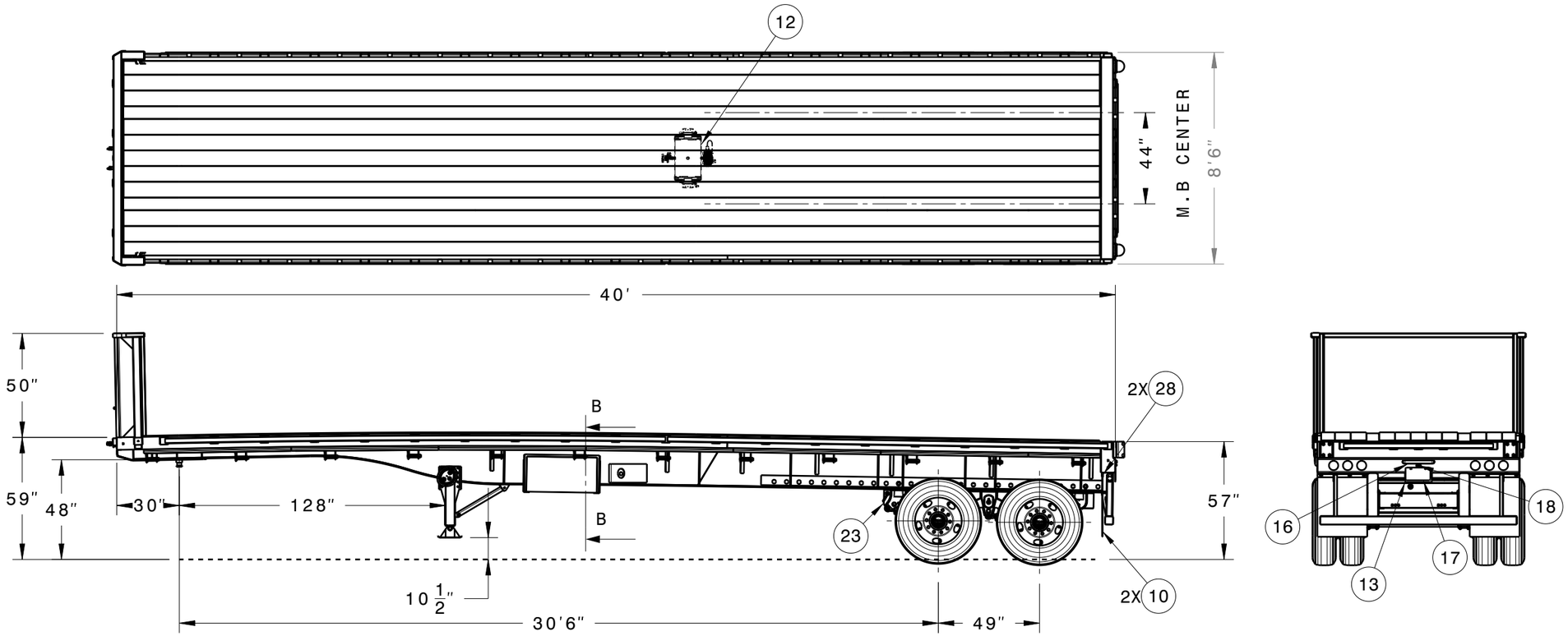

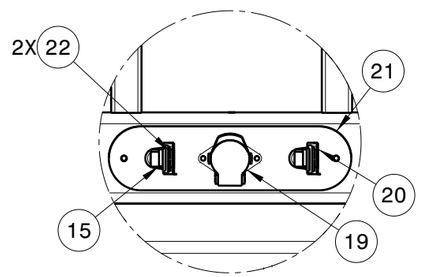

DETAIL C
SCALE: 1/10

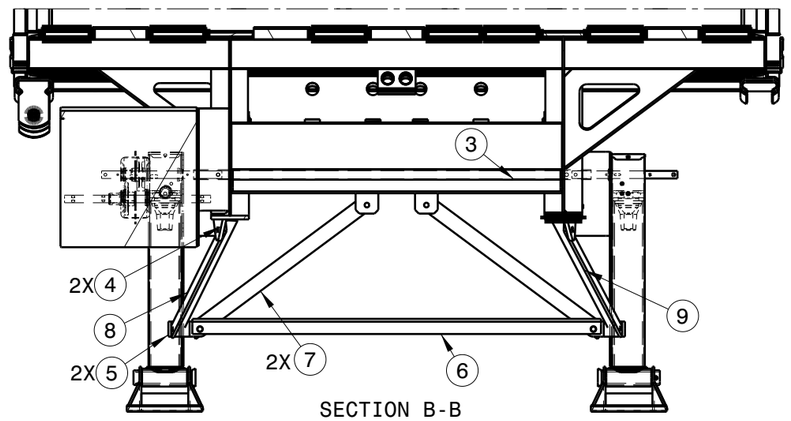

SECTION B-B
SCALE: 1/20

REV.	DESCRIPTION	BY	DATE
A.1	INITIAL RELEASE	CS	03-22-2019

DRAWN: CS	DATE: 03-22-2019	ALL DIMENSIONS ARE IN INCHES UNLESS OTHERWISE SPECIFIED	MATERIAL:
STRESS: BW	03-05-2019	TOLERANCES UNLESS OTHERWISE SPECIFIED: FRACTIONAL= +/-1/64	WEIGHT: 7832 lb
CHECKED: SN	03-22-2019	X.X=+/-0.1 X.XX=+/-0.01	FINISH:
APPROVED: JWALTERS	03-26-2019	X.XXX=+/-0.005 ANGLE=+/-0.5°	CAGE CODE: / SCALE: 1/50 / SIZE: B

GLOBE TRAILERS

THIS DRAWING IS INTENDED FOR REVIEW AND OR AUTHORIZATION PURPOSES ONLY AND MAY NOT BE DISCLOSED, REPRODUSED OR USED WITHOUT THE EXPRESS PERMISSION OF GLOBE TRAILERS

TITLE: 180967-20-TON, DOUBLE AXLE, FLATBED TRAILER_H

PARENTS:	DWG NO.	REV.	SHEET
180967	00530878	A.1	2/3



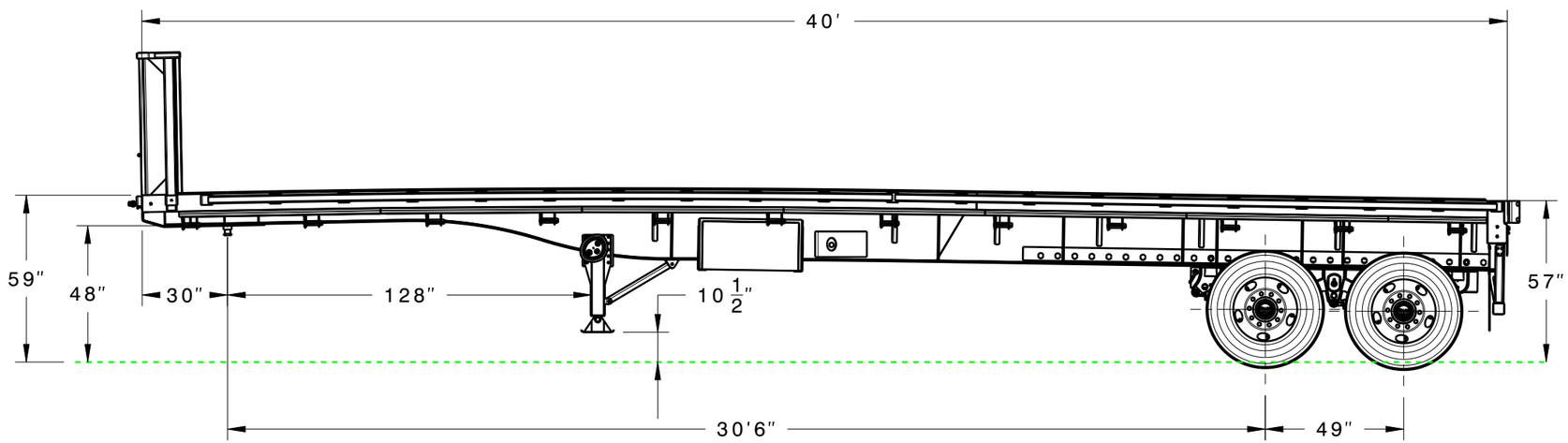

REV.	DESCRIPTION	BY	DATE
A.1	INITIAL RELEASE	CS	03-22-2019

DRAWN: CS	DATE: 03-22-2019	ALL DIMENSIONS ARE IN INCHES UNLESS OTHERWISE SPECIFIED	MATERIAL:
STRESS: BW	03-05-2019	TOLERANCES UNLESS OTHERWISE SPECIFIED: FRACTIONAL= +/-1/64	WEIGHT: 7832 lb
CHECKED: SN	03-22-2019	X.X=+/-0.1 X.XX=+/-0.01 X.XXX=+/-0.005 ANGLE=+/-0.5°	FINISH:
APPROVED: JWALTERS	03-26-2019		CAGE CODE: / SCALE: 1/50 / SIZE: B

GLOBE TRAILERS

THIS DRAWING IS INTENDED FOR REVIEW AND OR AUTHORIZATION PURPOSES ONLY AND MAY NOT BE DISCLOSED, REPRODUSED OR USED WITHOUT THE EXPRESS PERMISSION OF GLOBE TRAILERS

TITLE: 180967-20-TON, DOUBLE AXLE, FLATBED TRAILER_H

PARENTS:	DWG NO.	REV.	SHEET
180967	00530878	A.1	3/3