ITEM	PART NO	QTY	DESC	WT.EA	ET.EA
1	00110336	1	40 TON FLAT BED TRAILER STRUCTURE ASSEMBLY_H	9745.46	**
2	00110337	1	40TON GOOSENECK TRAILER WOOD FLOOR ASSEMBLY_B	**	**
3	00110341	2	MECH SUSPENSION ASM_B	**	**
4	00110293	3	255 WHEEL ASM_B	**	**
5	00142059	1	5HOLE PATTERN LH_B(31-320)	**	**
6	00142060	1	5HOLE PATTERN RH_B(31-320)	**	**
7	00110320	1	LANDING GEAR CROSSTUBE_25	4.2	**
8	00110263	2	LANDING GEAR VERTICAL BRACE 2_14	5.97	11.94
9	00110262	1	LANDING GEAR HORIZONTAL BRACE_14	13.85	**
10	00110206	6	LANDING LEG BRACKET_145	0.77	4.62
11	00068810	1	129015_9.5 INCH AIR TANK WITH SPRING BRAKE VALVE	**	**
12	00068821	1	13 INCH AIR TANK WITH 2S 1M ABS_B	**	**
13	00110205	1	10 LB FIRE EXTINGUISHER BRACKET ASSEMBLY_B	**	**
14	00110199	2	0.375in BLACK PLASTIC 24inX24in ANTI SAIL_B(36-370)	**	**
15	00081954	2	BOLT-ON MUDFLAP BRACKET_16	1.31	2.62
16	00110158	1	RAMP ASSEMBLY LH_H	284.53	**
17	00359661	1	RAMP ASSEMBLY RH_H	284.53	**
18	00110140	2	PIN_25	9.4	18.8
19	00110115	2	RAMP BRACE ARM ASSY_H	10.39	20.78
20	00110159	2	RAMP TENSION TUBE_2	2.79	5.58
21	00110288	1	SPARE TIRE ASSMEMBLY_H	36.06	**
22	00110340	2	LIFTING ATTACHMENT LH_H	70.62	141.24
23	00110132	2	LIFTING ATTACHMENT RH_H	70.62	141.24
24	00085643	1	LICENSE PLATE_B	2.8	**
25	00085645	1	LICENSE PLATE LIGHT_B(33-382)	**	**

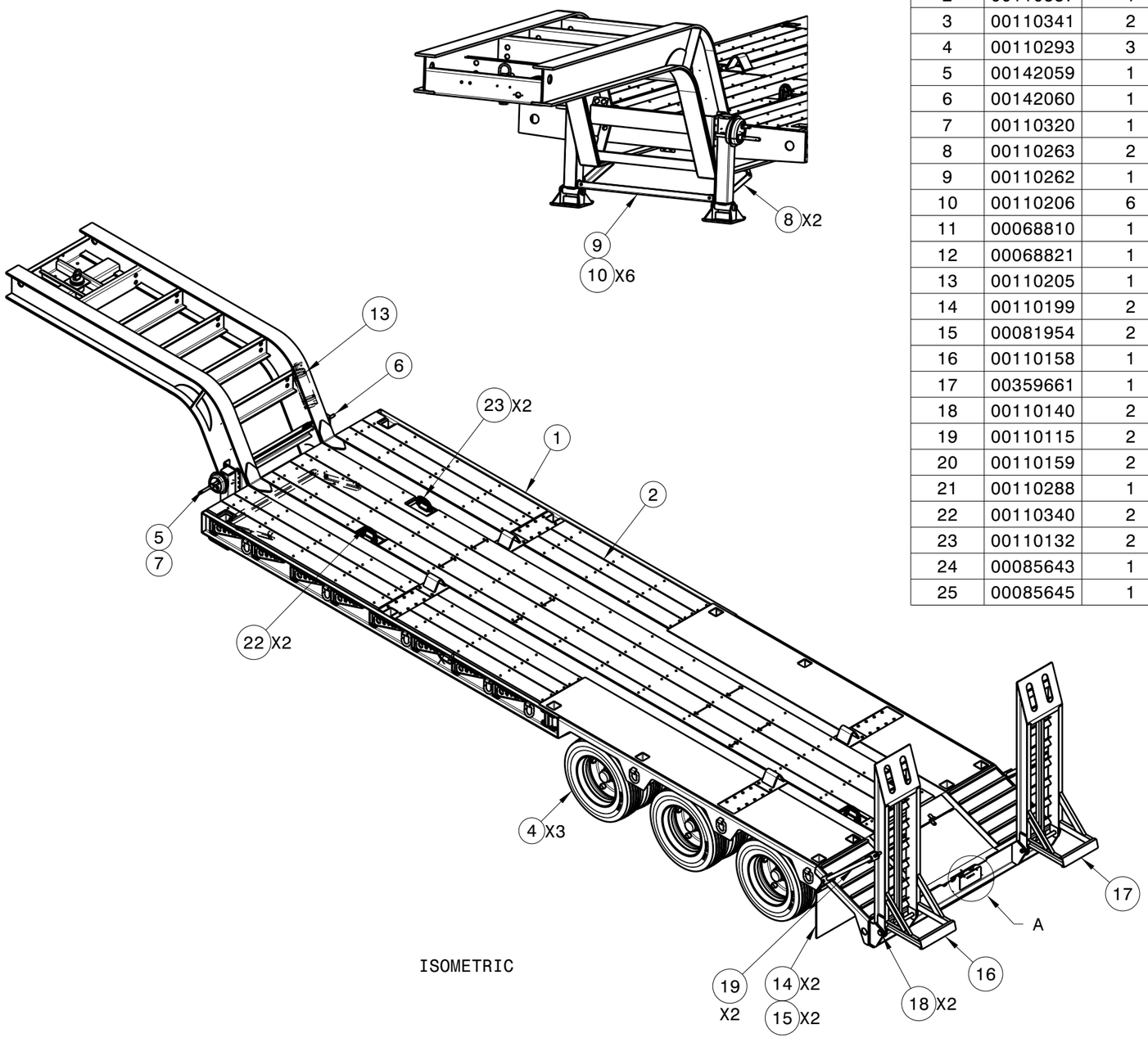

ISOMETRIC

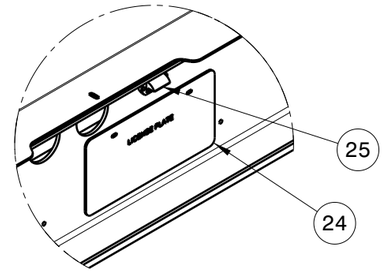

DETAIL A
SCALE: 1/10

DESIGN CRITERIA
TIRE SIZE : 255/70Rx22.5 H ALL STEELS
WHEEL SIZE : 8.25x22.5
SUSPENSION : ----------
AXLE TRACK : 77-1/2"

REV.	DESCRIPTION	BY	DATE
A.1	INITIAL RELEASE	SJP	02-07-2018

DRAWN: SJP | DATE: 02-07-2018
STRESS:
CHECKED:
APPROVED:

ALL DIMENSIONS ARE IN INCHES UNLESS OTHERWISE SPECIFIED
TOLERANCES UNLESS OTHERWISE SPECIFIED:
FRACTIONAL= +/-1/64
X.X=+/-0.1
X.XX=+/-0.01
X.XXX=+/-0.005
ANGLE=+/-0.5°

MATERIAL: | WEIGHT: 10715.45 lb
FINISH:
CAGE CODE: | SCALE: 1/50 | SIZE: B

GLOBE TRAILERS

THIS DRAWING IS INTENDED FOR REVIEW AND OR AUTHORIZATION PURPOSES ONLY AND MAY NOT BE DISCLOSED, REPRODUSED OR USED WITHOUT THE EXPRESS PERMISSION OF GLOBE TRAILERS

TITLE: 40 TON GOOSENECK TRAILER ASSEMBLY_H

PARENTS: 171106 | DWG NO. 00110342 | REV. A.1 | SHEET 1/4

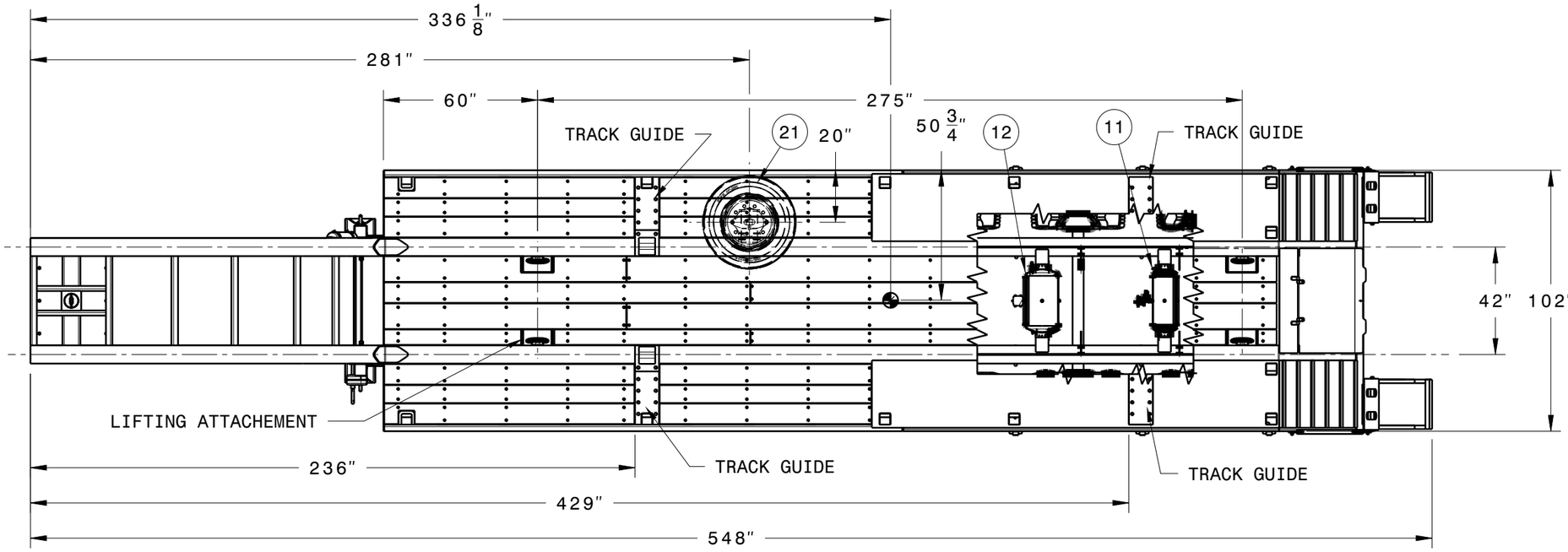

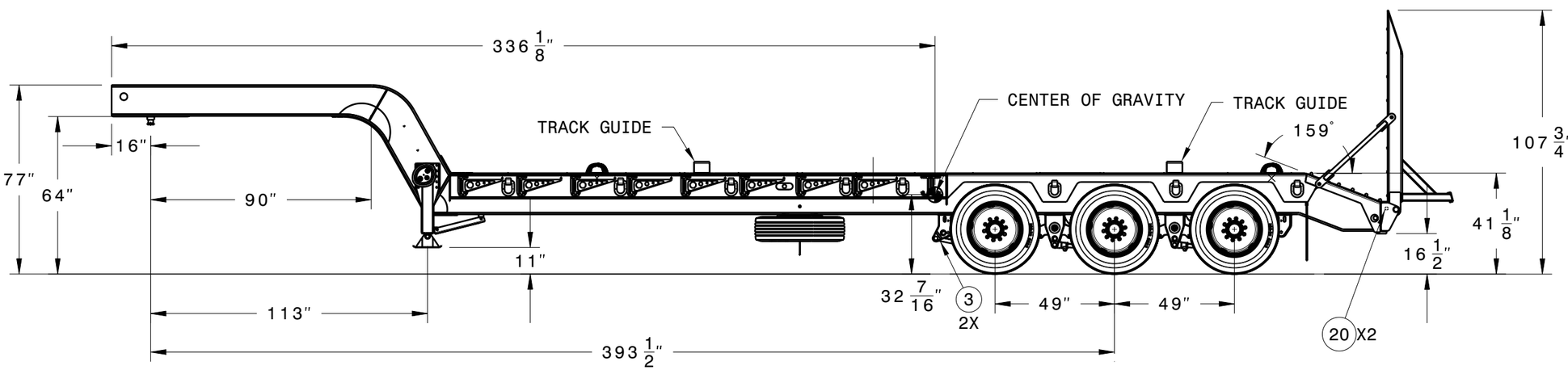

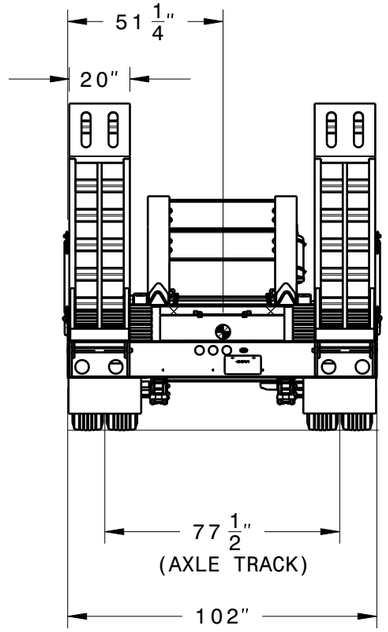

				DRAWN: SJP	DATE: 02-07-2018	ALL DIMENSIONS ARE IN INCHES UNLESS OTHERWISE SPECIFIED	MATERIAL:	WEIGHT: 10715.45 lb	GLOBE TRAILERS	TITLE: 40 TON GOOSENECK TRAILER ASSEMBLY_H	
				STRESS:		TOLERANCES UNLESS OTHERWISE SPECIFIED: FRACTIONAL= +/-1/64	FINISH:				
A.1	INITIAL RELEASE	SJP	02-07-2018	CHECKED:		X.X=+/-0.1 X.XX=+/-0.01 X.XXX=+/-0.005 ANGLE=+/-0.5°			THIS DRAWING IS INTENDED FOR REVIEW AND OR AUTHORIZATION PURPOSES ONLY AND MAY NOT BE DISCLOSED, REPRODUSED OR USED WITHOUT THE EXPRESS PERMISSION OF GLOBE TRAILERS	PARENTS: 171106	DWG NO. 00110342 / REV. A.1 / SHEET 2/4
REV.	DESCRIPTION	BY	DATE	APPROVED:			CAGE CODE:	SCALE: 1/50 / SIZE: B			

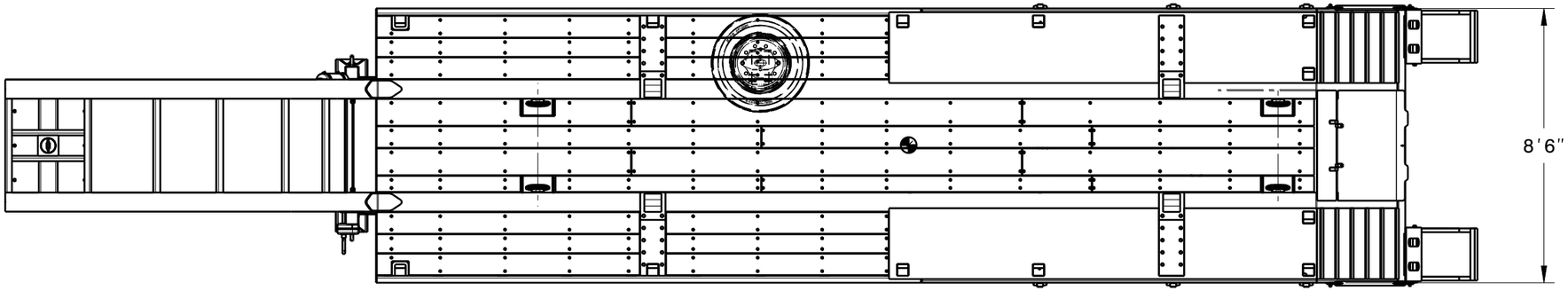

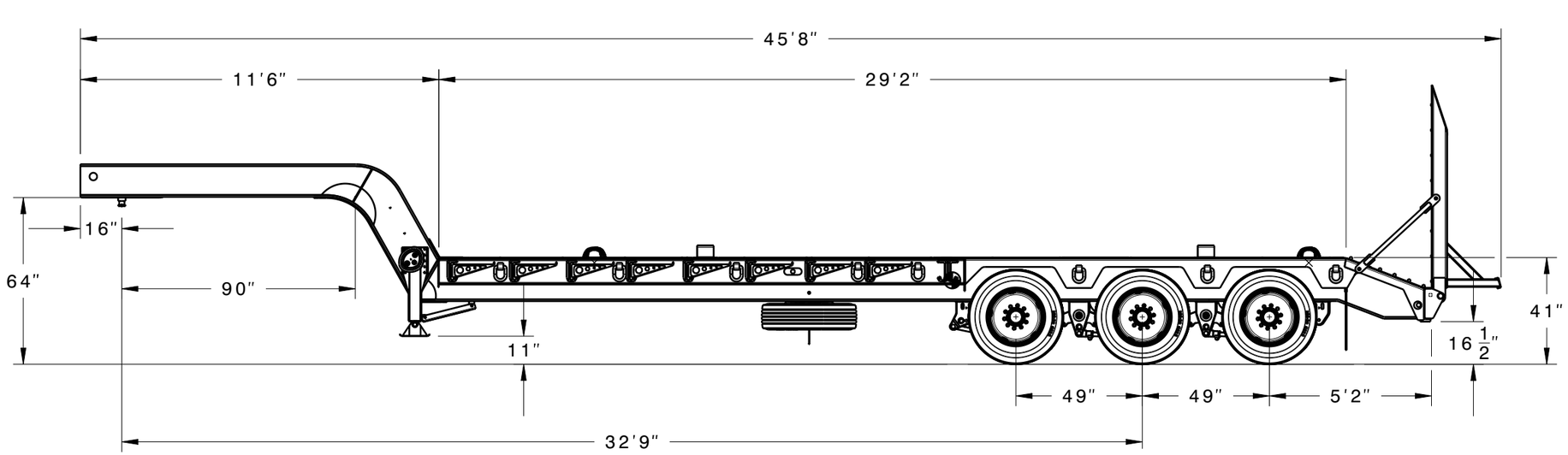

				DRAWN: SJP	DATE: 02-07-2018	ALL DIMENSIONS ARE IN INCHES UNLESS OTHERWISE SPECIFIED	MATERIAL:	WEIGHT: 10715.45 lb	GLOBE TRAILERS	TITLE: 40 TON GOOSENECK TRAILER ASSEMBLY_H	
				STRESS:		TOLERANCES UNLESS OTHERWISE SPECIFIED: FRACTIONAL= +/-1/64	FINISH:				
				CHECKED:		X.X=+/-0.1 X.XX=+/-0.01 X.XXX=+/-0.005 ANGLE=+/-0.5°					
A.1	INITIAL RELEASE	SJP	02-07-2018	APPROVED:			CAGE CODE:	SCALE: 1/50 SIZE: B	THIS DRAWING IS INTENDED FOR REVIEW AND OR AUTHORIZATION PURPOSES ONLY AND MAY NOT BE DISCLOSED, REPRODUSED OR USED WITHOUT THE EXPRESS PERMISSION OF GLOBE TRAILERS	PARENTS: 171106	DWG NO. 00110342 / REV. A.1 / SHEET 3/4
REV.	DESCRIPTION	BY	DATE								

DATA PLATE SIZE 4.5" H X 8.5" W

40-TON GOOSENECK TRAILER
UNITED STATES
NATIONAL STOCK NO: ******
MANUFACTURED BY: GLOBE TRAILERS 3101 59TH AVE DR. E BRADENTON, FL 34203
VEHICLE ID NO:
CONTRACT NO: *****

TIEDOWN DESIGN LOAD lbs.	FRONT	REAR
FORE AND AFT	22812 ea	22812 ea
DOWNWARD	5703.01 ea	5703.01 ea
LEFT AND RIGHT	8555 ea	8555 ea

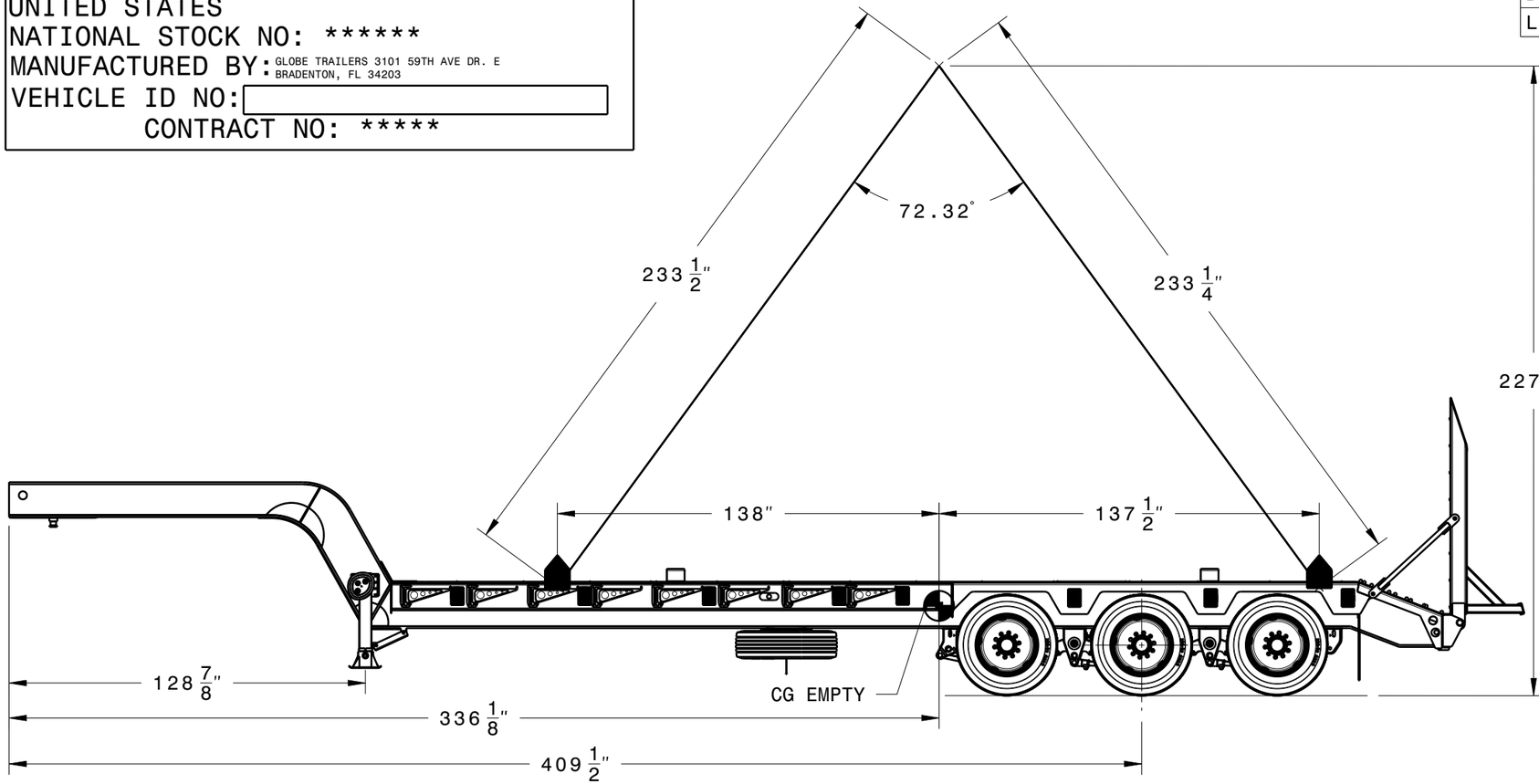

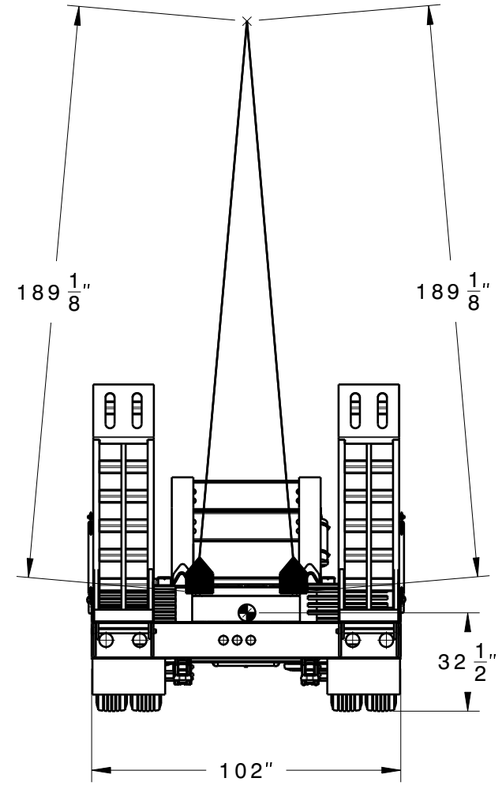

■ CARGO TIEDOWNS

▼ EQUIPMENT TIEDOWN PROVISIONS

LIFTING PROVISIONS

CENTER OF GRAVITY UNLOADED

WEIGHT	EMPTY		LOADED		
PAYLOAD			88184 MAX	AXLE RATING	25,000 ea
ON WHEELS	8424.91	9280.99	75000 MAX		
ON KINGPIN		2125.04	40000 MAX	CARGO TIEDOWN PROVISIONS	15,000 ea
ON LANDING GEAR	2981.12		55000 MAX		
TOTAL	11406.03		99590.03		

LIFTING DESIGN LIMIT 25000 Lbs.

REV.	DESCRIPTION	BY	DATE
A.1	INITIAL RELEASE	SJP	02-07-2018

DRAWN: SJP | DATE: 02-07-2018
STRESS: | CHECKED: | APPROVED:

ALL DIMENSIONS ARE IN INCHES UNLESS OTHERWISE SPECIFIED
TOLERANCES UNLESS OTHERWISE SPECIFIED:
FRACTIONAL= +/-1/64
X.X=+/-0.1
X.XX=+/-0.01
X.XXX=+/-0.005
ANGLE=+/-0.5°

MATERIAL: | WEIGHT: 10715.45 lb
FINISH:
CAGE CODE: | SCALE: 1/50 | SIZE: B

GLOBE TRAILERS

THIS DRAWING IS INTENDED FOR REVIEW AND OR AUTHORIZATION PURPOSES ONLY AND MAY NOT BE DISCLOSED, REPRODUSED OR USED WITHOUT THE EXPRESS PERMISSION OF GLOBE TRAILERS

TITLE: 40 TON GOOSENECK TRAILER ASSEMBLY_H

PARENTS:	DWG NO.	REV.	SHEET
171106	00110342	A.1	4/4