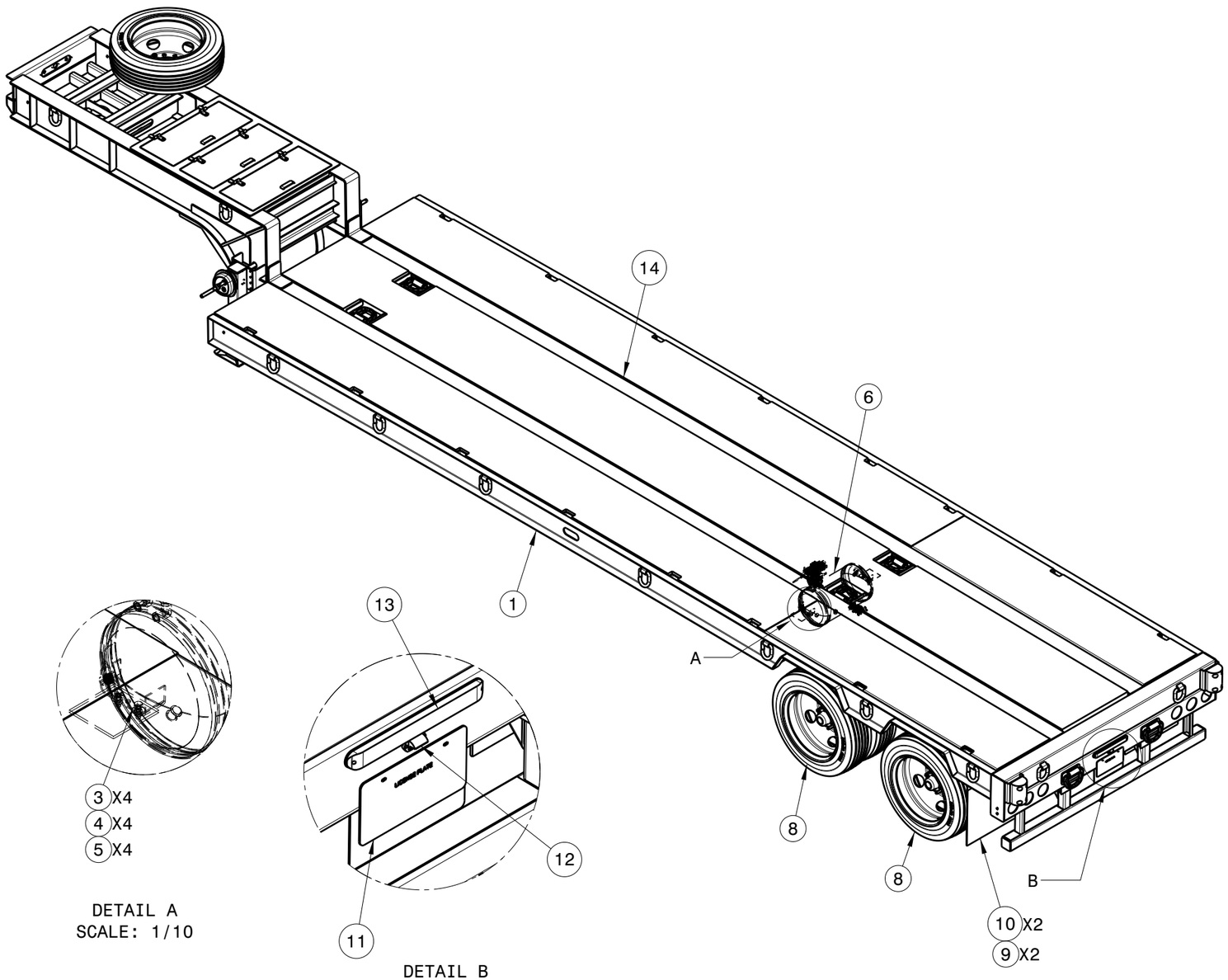

DETAIL A
SCALE: 1/10

DETAIL B
SCALE: 1/10

ITEM NO.	PART NO.	QTY	DESC	WT.EA	ET.EA
1	00459545	1	25 TON DROP DECK TRAILER STRUCTURE ASSEMBLY_H	7312.71	**
2	00034173	4	F643 120K D-ring_B	**	**
3	00082199	4	ANSI_B18.22M WASHER 10x28 STEEL PLAIN_B(GPN REQUIRED)	**	**
4	00082198	4	ASME B18.2.4.2M NUT M10 STEEL HEXAGON STYLE 2_B(GPN REQUIRED)	**	**
5	00082197	4	ANSI B18.2.3.5M BOLT M10x30 STEEL HEXAGON_B(GPN REQUIRED)	**	**
6	00068818	1	13 INCH AIR TANK WITH 2S 1M ABS AND SPRING BRAKE VALVE_B	**	**
7	00284989	2	H9700 49 TA US UN MT .75 SS WITH 365-00 SPRING_B(GPN REQUIRED)	**	**
8	00376406	2	255/70R22.5-71.5in AXLE TRACK ALL STEEL_B	**	**
9	00081954	2	BOLT-ON MUDFLAP BRACKET_16	1.31	2.62
10	00036400	2	0.25in PLASTIC MUD FLAP WITH GLOBE LOGOx24inWIDEx24inLONG_B (36-364)	**	**
11	00085643	1	LICENSE PLATE_B	**	**
12	00085645	1	LICENSE PLATE LIGHT_B(33-382)	**	**
13	00085644	1	SLIMLINE IDENTIFICATION LIGHT BAR_B(33-403)	**	**
14	00459681	1	DECK WOOD_B	**	**
15	00063333	18	3in x 4in x 1in BENT D RING_B(21-214)	**	**
16	00276522	1	255/70Rx22.5-8.25x22.5-10HOLE-STEEL(50-537old)_B(50-255S)	**	**
17	00466983	2	71.5 AXLE_B	**	**
18	00300619	2	3in x 3in x 1in D-RING_B(21-212)	**	**

DESIGN CRITERIA

TIRE SIZE : 255/70R X 22.5 H
WHEEL SIZE : 8.25 X 22.5 ALL STEEL
SUSPENSION : H9700 WITH 365-00
AXLE TRACK : 71-1/2"

REV.	DESCRIPTION	BY	DATE
A.1	INITIAL RELEASE	VS	09-27-2018

DRAWN: VS | DATE: 09-27-2018
STRESS:
CHECKED:
APPROVED:

ALL DIMENSIONS ARE IN INCHES UNLESS OTHERWISE SPECIFIED
TOLERANCES UNLESS OTHERWISE SPECIFIED:
FRACTIONAL= +/-1/64
X.X=+/-0.1
X.XX=+/-0.01
X.XXX=+/-0.005
ANGLE=+/-0.5°

MATERIAL: | WEIGHT: 11622.45 lb
FINISH:
CAGE CODE: | SCALE: 1/40 | SIZE: B

GLOBE TRAILERS

THIS DRAWING IS INTENDED FOR REVIEW AND OR AUTHORIZATION PURPOSES ONLY AND MAY NOT BE DISCLOSED, REPRODUSED OR USED WITHOUT THE EXPRESS PERMISSION OF GLOBE TRAILERS

TITLE: 180817-25T DROP DECK(GTFV252-40-30)_H

PARENTS: 180817 | DWG NO. 00459531 | REV. A.1 | SHEET 1/5

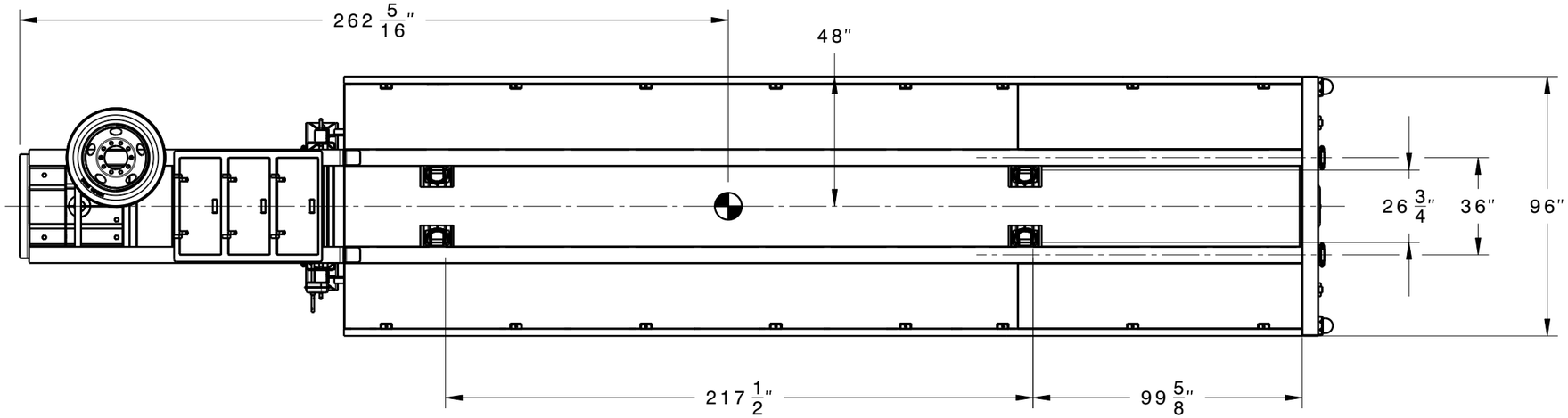

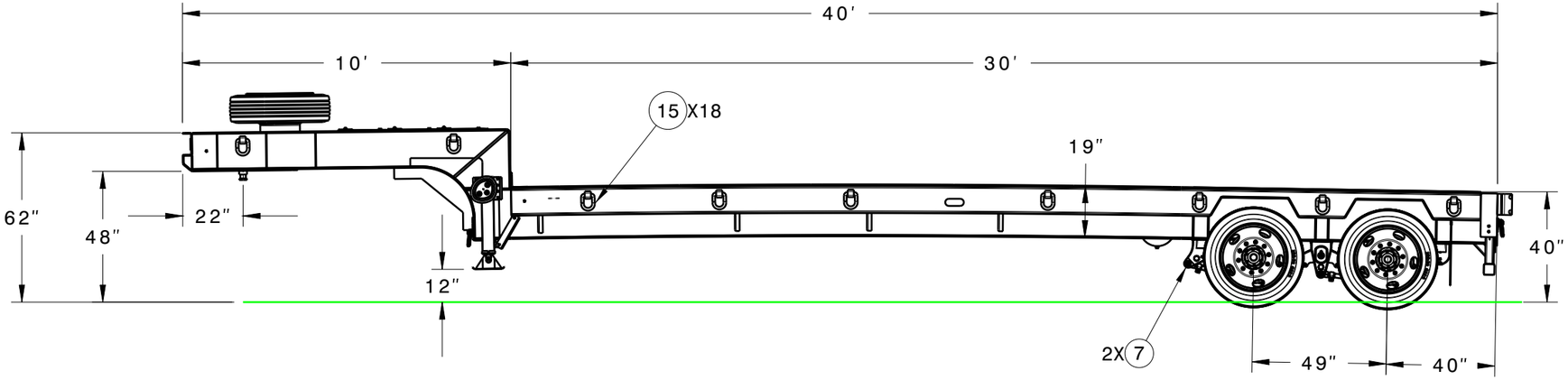

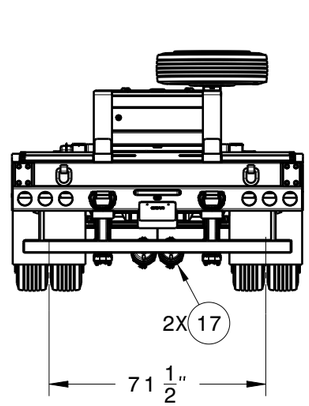

DESIGN CRITERIA
TIRE SIZE : 255/70R X 22.5 H
WHEEL SIZE : 8.25 X 22.5 ALL STEEL
SUSPENSION : H9700 WITH 365-00
AXLE TRACK : 71-1/2"

REV.	DESCRIPTION	BY	DATE
A.1	INITIAL RELEASE	VS	09-27-2018

DRAWN: VS | DATE: 09-27-2018
STRESS: | CHECKED: | APPROVED:

ALL DIMENSIONS ARE IN INCHES UNLESS OTHERWISE SPECIFIED

TOLERANCES UNLESS OTHERWISE SPECIFIED:
FRACTIONAL= +/-1/64
X.X=+/-0.1
X.XX=+/-0.01
X.XXX=+/-0.005
ANGLE=+/-0.5°

MATERIAL: | WEIGHT: 11622.45 lb
FINISH:
CAGE CODE: | SCALE: 1/50 | SIZE: B

GLOBE TRAILERS

THIS DRAWING IS INTENDED FOR REVIEW AND OR AUTHORIZATION PURPOSES ONLY AND MAY NOT BE DISCLOSED, REPRODUSED OR USED WITHOUT THE EXPRESS PERMISSION OF GLOBE TRAILERS

TITLE: 180817-25T DROP DECK(GTFV252-40-30)_H

PARENTS:	DWG NO.	REV.	SHEET
180817	00459531	A.1	2/5

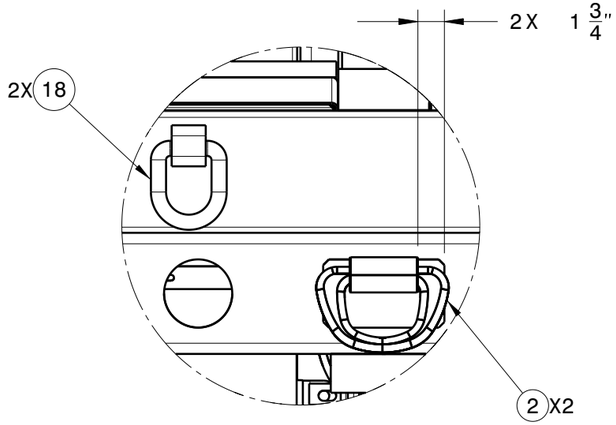

DETAIL C
SCALE: 1/10

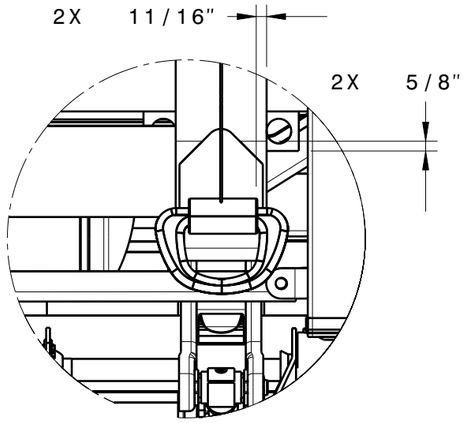

SECTION D-D
SCALE: 1/10

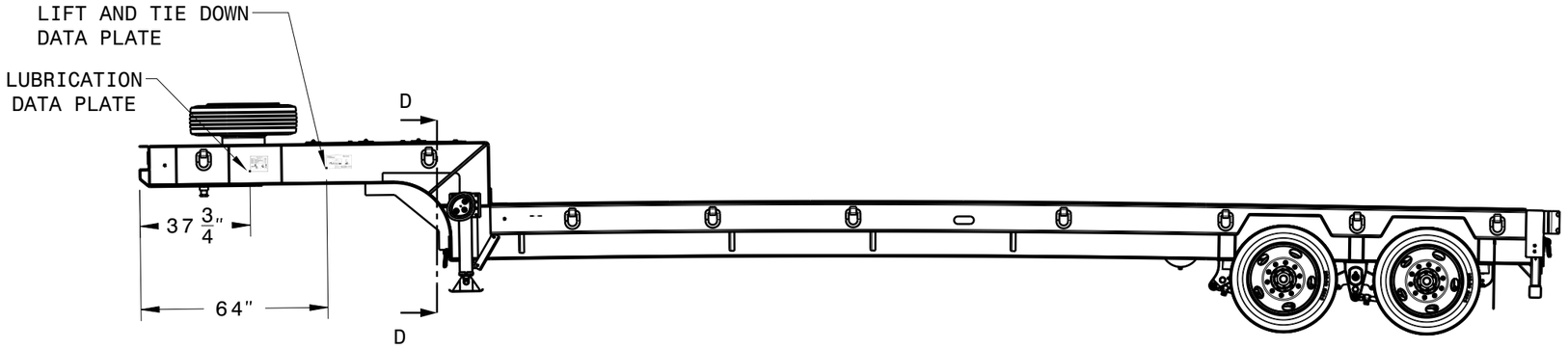

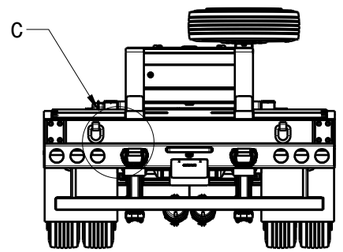

REV.	DESCRIPTION	BY	DATE
A.1	INITIAL RELEASE	VS	09-27-2018

DRAWN: VS | DATE: 09-27-2018
STRESS:
CHECKED:
APPROVED:

ALL DIMENSIONS ARE IN INCHES UNLESS OTHERWISE SPECIFIED

TOLERANCES UNLESS OTHERWISE SPECIFIED:
FRACTIONAL= +/-1/64
X.X=+/-0.1
X.XX=+/-0.01
X.XXX=+/-0.005
ANGLE=+/-0.5°

MATERIAL: | WEIGHT: 11622.45 lb
FINISH:
CAGE CODE: | SCALE: 1/50 | SIZE: B

GLOBE TRAILERS

THIS DRAWING IS INTENDED FOR REVIEW AND OR AUTHORIZATION PURPOSES ONLY AND MAY NOT BE DISCLOSED, REPRODUSED OR USED WITHOUT THE EXPRESS PERMISSION OF GLOBE TRAILERS

TITLE: 180817-25T DROP DECK(GTFV252-40-30)_H

PARENTS: 180817 | DWG NO. 00459531 | REV. A.1 | SHEET 3/5

DATA PLATE SIZE 4.5" H X 8.5" W

20-TON LOWBED TRAILER
UNITED STATES AIR FORCE
NATIONAL STOCK NO: 2330-01-381-9477YW
MANUFACTURED BY: GLOBE TRAILERS 3101 59TH AVE DR. E BRADENTON, FL 34203
VEHICLE ID NO:
CONTRACT NO: SPE8EC-13-D-0022

TIEDOWN DESIGN LOAD lbs.	FRONT	REAR
FORE AND AFT	29,012 ea	29,012 ea
DOWNWARD	7253 ea	7253 ea
LEFT AND RIGHT	10,880 ea	10,880 ea

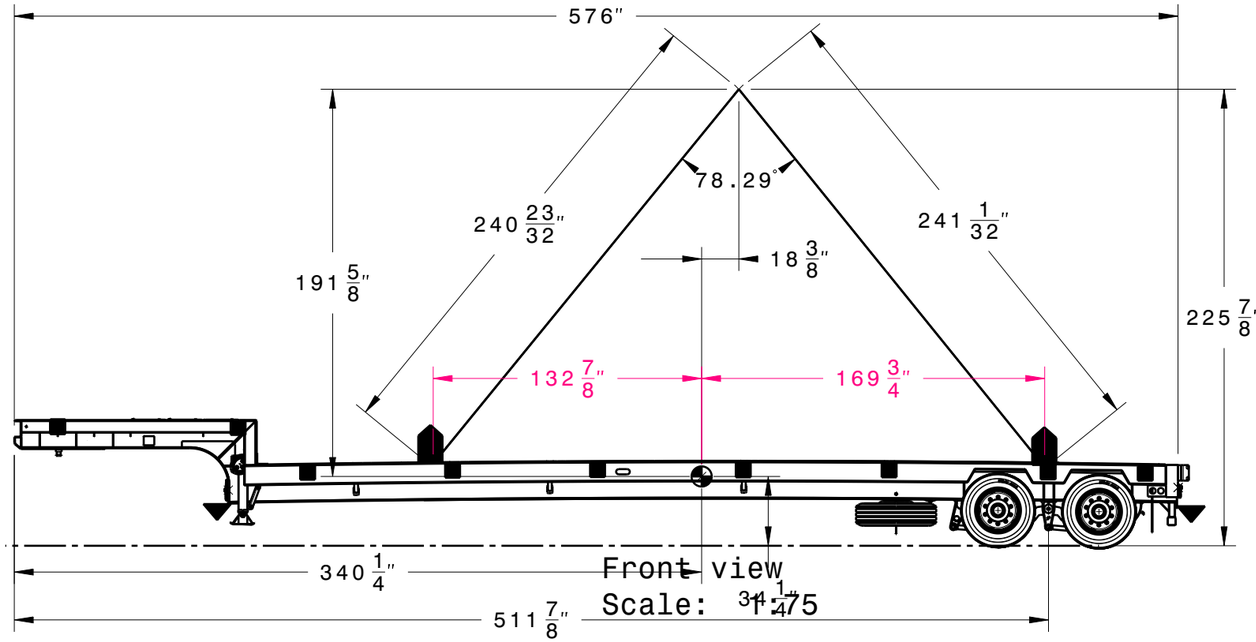

Front view
Scale: 1:75

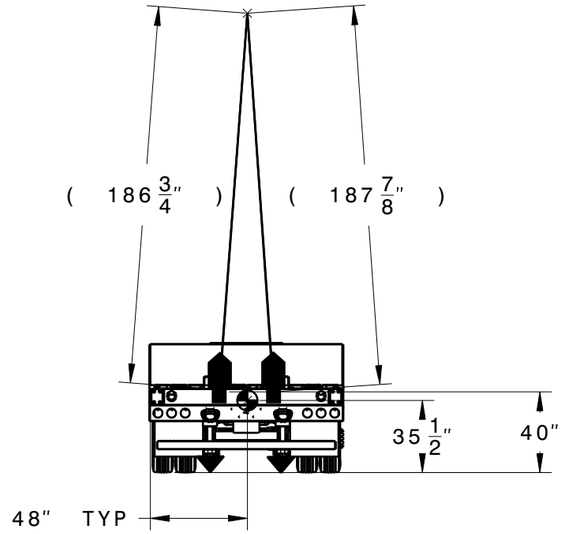

■ CARGO TIEDOWNS

▼ EQUIPMENT TIEDOWN PROVISIONS

LIFTING PROVISIONS

CENTER OF GRAVITY UNLOADED

WEIGHT	EMPTY		LOADED		
PAYLOAD			44,100 MAX	AXLE RATING	25,000 ea
ON WHEELS	8207	9376	47,500 MAX		
ON KINGPIN		5130	40,000 MAX	CARGO TIEDOWN PROVISIONS	15,000 ea
ON LANDING GEAR	6298		55,000 MAX		
TOTAL	14506		58606		

LIFTING DESIGN LIMIT 30,000 Lbs.

REV.	DESCRIPTION	BY	DATE
A.1	INITIAL RELEASE	VS	09-25-2018

DRAWN: VS | DATE: 09-25-2018
STRESS:
CHECKED:
APPROVED:

ALL DIMENSIONS ARE IN INCHES UNLESS OTHERWISE SPECIFIED
TOLERANCES UNLESS OTHERWISE SPECIFIED:
FRACTIONAL= +/-1/64
X.X=+/-0.1
X.XX=+/-0.01
X.XXX=+/-0.005
ANGLE=+/-0.5°

MATERIAL: | WEIGHT: 5726.65 lb
FINISH:
CAGE CODE: | SCALE: 1/75 | SIZE: B

GLOBE TRAILERS

THIS DRAWING IS INTENDED FOR REVIEW AND OR AUTHORIZATION PURPOSES ONLY AND MAY NOT BE DISCLOSED, REPRODUSED OR USED WITHOUT THE EXPRESS PERMISSION OF GLOBE TRAILERS

TITLE: 180817-25T DROP DECK(GTFV252-40-30)_H
PARENTS: 180817 | DWG NO. 00459531 | REV. A.1 | SHEET 4/5

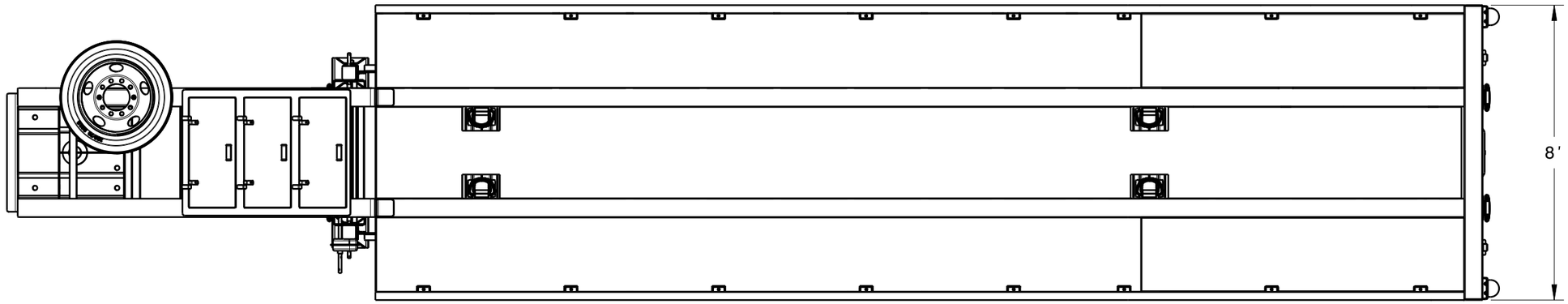

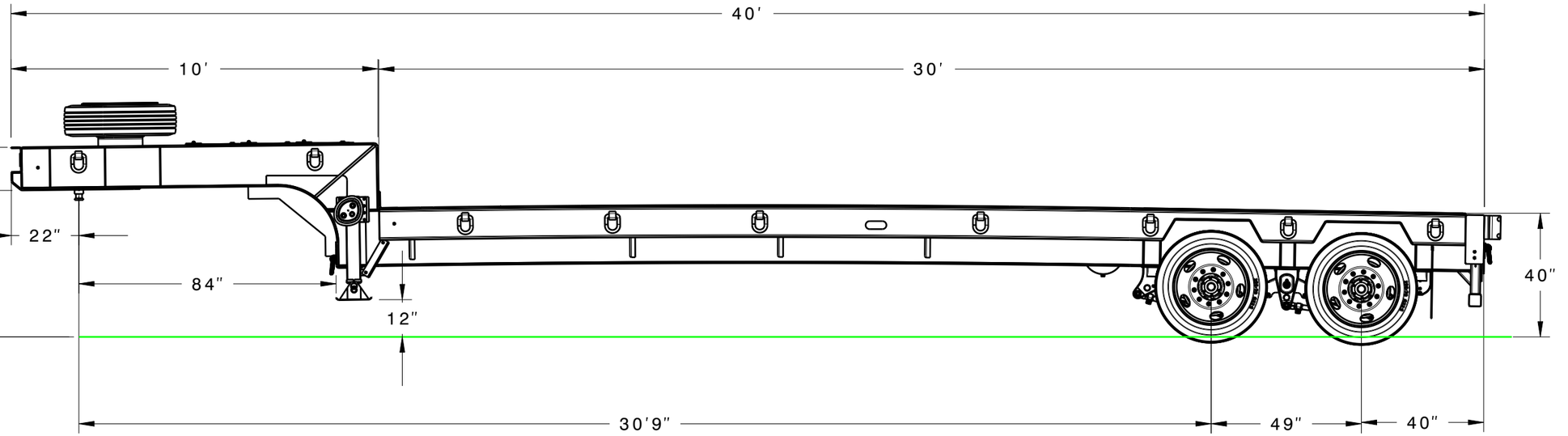

NOTE: ALL DIMENSIONS ARE NOMINAL (±3")

REV.	DESCRIPTION	BY	DATE
A.1	INITIAL RELEASE	VS	09-27-2018

DRAWN: VS | DATE: 09-27-2018
STRESS:
CHECKED:
APPROVED:

ALL DIMENSIONS ARE IN INCHES UNLESS OTHERWISE SPECIFIED
TOLERANCES UNLESS OTHERWISE SPECIFIED:
FRACTIONAL= +/-1/64
X.X=+/-0.1
X.XX=+/-0.01
X.XXX=+/-0.005
ANGLE=+/-0.5°

MATERIAL: | WEIGHT: 11622.45 lb
FINISH:
CAGE CODE: | SCALE: 1/40 | SIZE: B

GLOBE TRAILERS

THIS DRAWING IS INTENDED FOR REVIEW AND OR AUTHORIZATION PURPOSES ONLY AND MAY NOT BE DISCLOSED, REPRODUSED OR USED WITHOUT THE EXPRESS PERMISSION OF GLOBE TRAILERS

TITLE: 180817-25T DROP DECK(GTFV252-40-30)_H

PARENTS:	DWG NO.	REV.	SHEET
180817	00459531	A.1	5/5