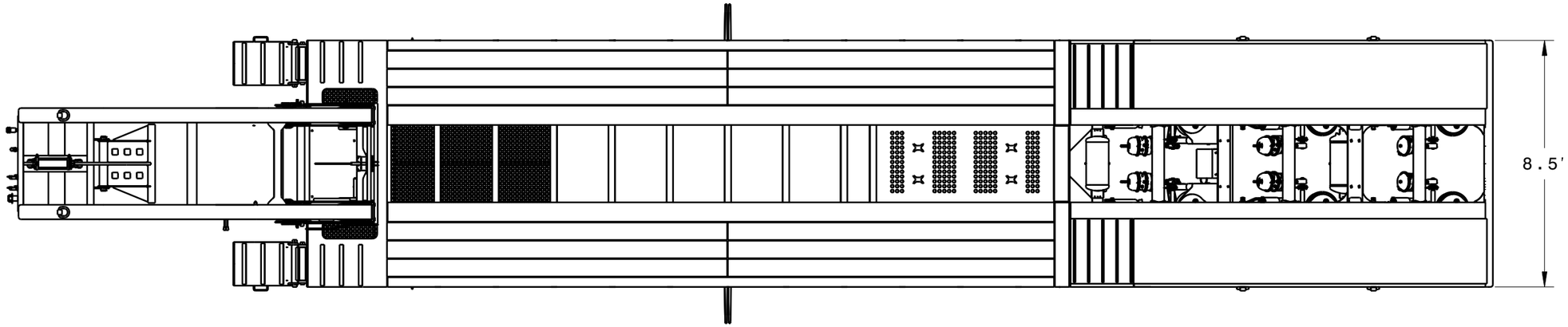

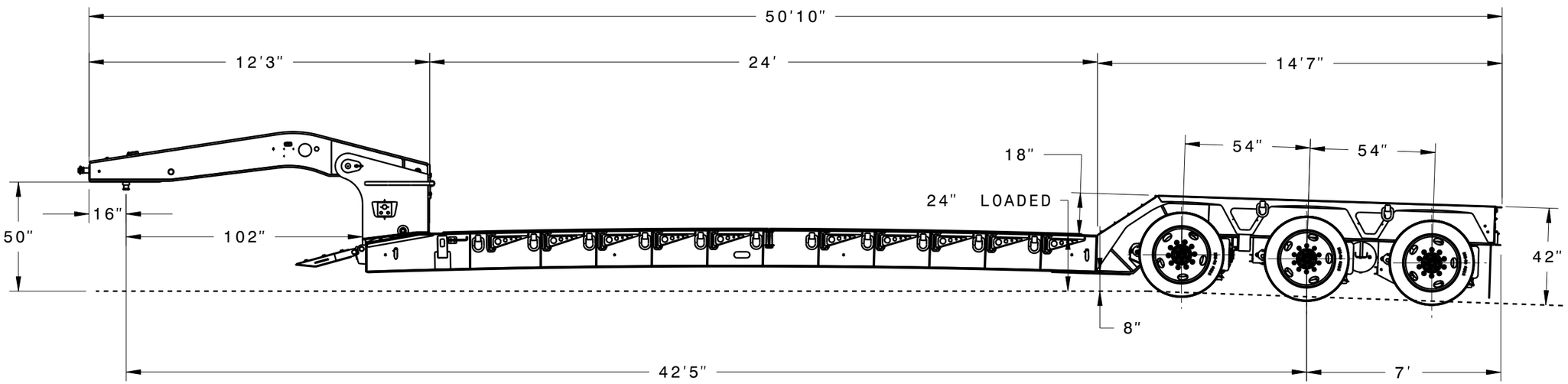

REV.	DESCRIPTION	BY	DATE
A.1	INITIAL RELEASE	SJP	02-14-2018

DRAWN: SJP
DATE: 02-14-2018
STRESS:
CHECKED:
APPROVED:

ALL DIMENSIONS ARE IN INCHES UNLESS OTHERWISE SPECIFIED

TOLERANCES UNLESS OTHERWISE SPECIFIED:
FRACTIONAL= +/-1/64
X.X=+/-0.1
X.XX=+/-0.01
X.XXX=+/-0.005
ANGLE=+/-0.5°

MATERIAL:
WEIGHT: 10264.02 lb
FINISH:
CAGE CODE:
SCALE: 1/50
SIZE: B

GLOBE TRAILERS

THIS DRAWING IS INTENDED FOR REVIEW AND OR AUTHORIZATION PURPOSES ONLY AND MAY NOT BE DISCLOSED, REPRODUSED OR USED WITHOUT THE EXPRESS PERMISSION OF GLOBE TRAILERS

TITLE: 171223-50-Ton GG (GTBN503-51-24-GG)_H

PARENTS:	DWG NO.	REV.	SHEET
171223	00364847	A.1	3/3